MCR-78-618
Contract NAS9-15012

CR151846

Addendum
to Final
Report

October 1978

# Spacecraft Utensil/Hand Cleansing Fixture

(NASA-CR-151846) SPACECRAFT UTENSIL/HAND CLEANSING FIXTURE, ADDENDUM Final Report (Martin Marietta Corp.) 125 p. HC A06/MF A01 CSCL 06K
N79-11732
Unclas
G3/54 37165

DEC 0 1978
RECEIVED
NASA STI FACILITY

Prepared for:

National Aeronautics and
Space Administration
Lyndon B. Johnson Space Center
Houston, Texas

MARTIN MARIETTA

Contract NAS9-15012
DRL Number T-1271
DRL Line Item 7
DRD Number MA-514TB
MCR-78-618

# ADDENDUM TO

# FINAL REPORT

## Spacecraft Utensil/Hand Cleansing Fixture

October 1978

Prepared by:

T. G. Jonkoniec

Approved by:

Arthur A. Rosener
Program Manager

MARTIN MARIETTA CORPORATION
P.O. Box 179
Denver, Colorado 80201

## FOREWORD

This document presents the results of work performed by the Martin Marietta Corporation's Denver Division for the National Aeronautics and Space Administration, Lyndon B. Johnson Space Center. This final report for the development of a prototype unit was prepared as fulfillment of Contract NAS9-15012, "Spacecraft Utensil/Hand Cleansing Fixture." The NASA Technical Manager was Mr. John B. Westover, Payloads Systems Support Branch.

This addendum to the Spacecraft Utensil/Hand Cleaning Fixture Final Report contains the engineering drawings and component spec sheets used in the fabrication of the prototype fixture. The drawings are interrelated according to the drawing tree shown in Figure 1.

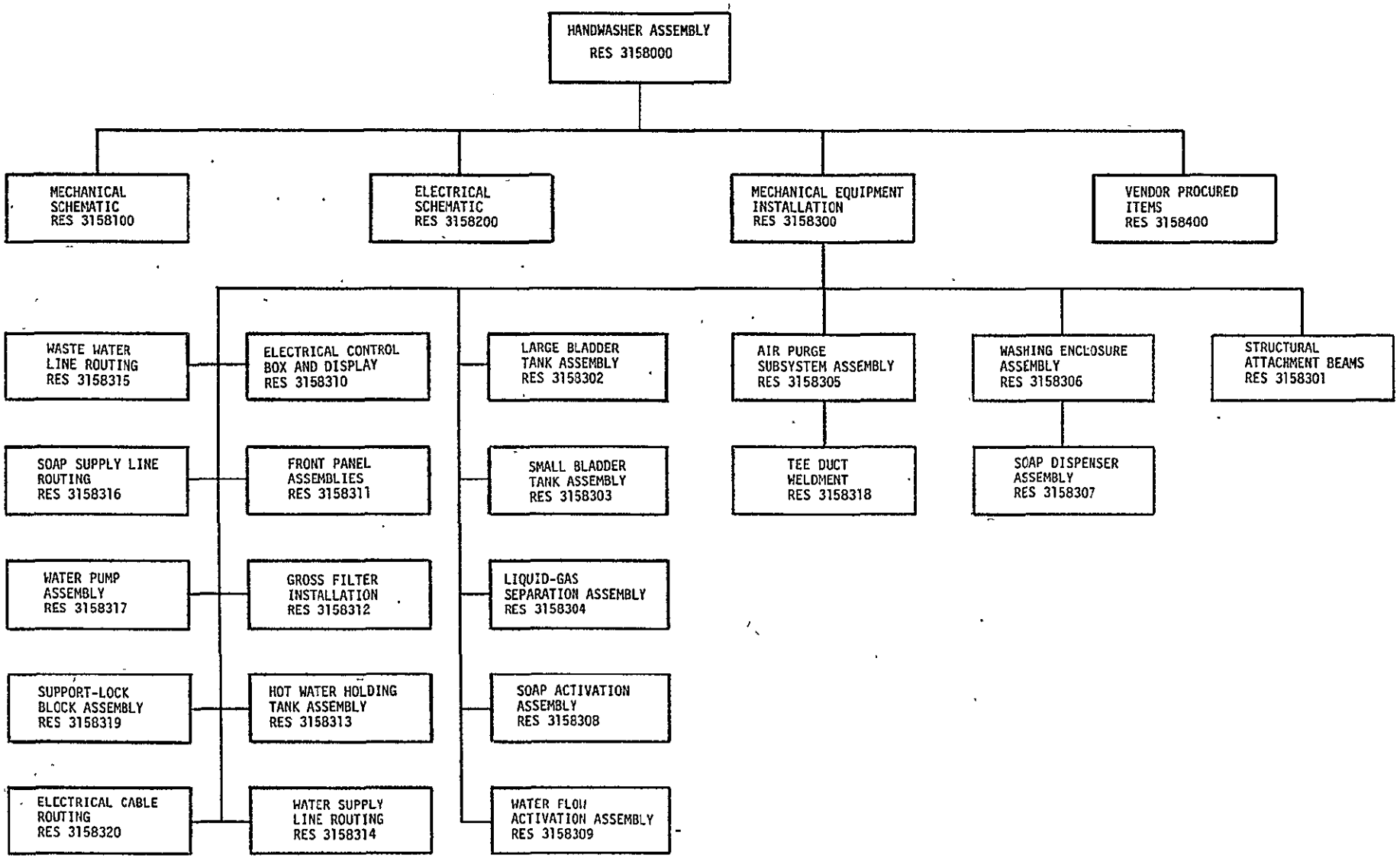


FIGURE 1 ENGINEERING DRAWING TREE

ORIGINAL PAGE IS OF POOR QUALITY

FOLDOUT FRAME 1

FOLDOUT FRAME 2

| REVISIONS | | | | |
|---|---|---|---|---|
| SYM | ZONE | DESCRIPTION | DATE | APPROVED |
| A | B6 | REPLACED LEG SWITCH DEVICES WITH ARM SWITCHES | CHG BY TGJ 7-6-78 | G.G. Ramey 7-7-78 |

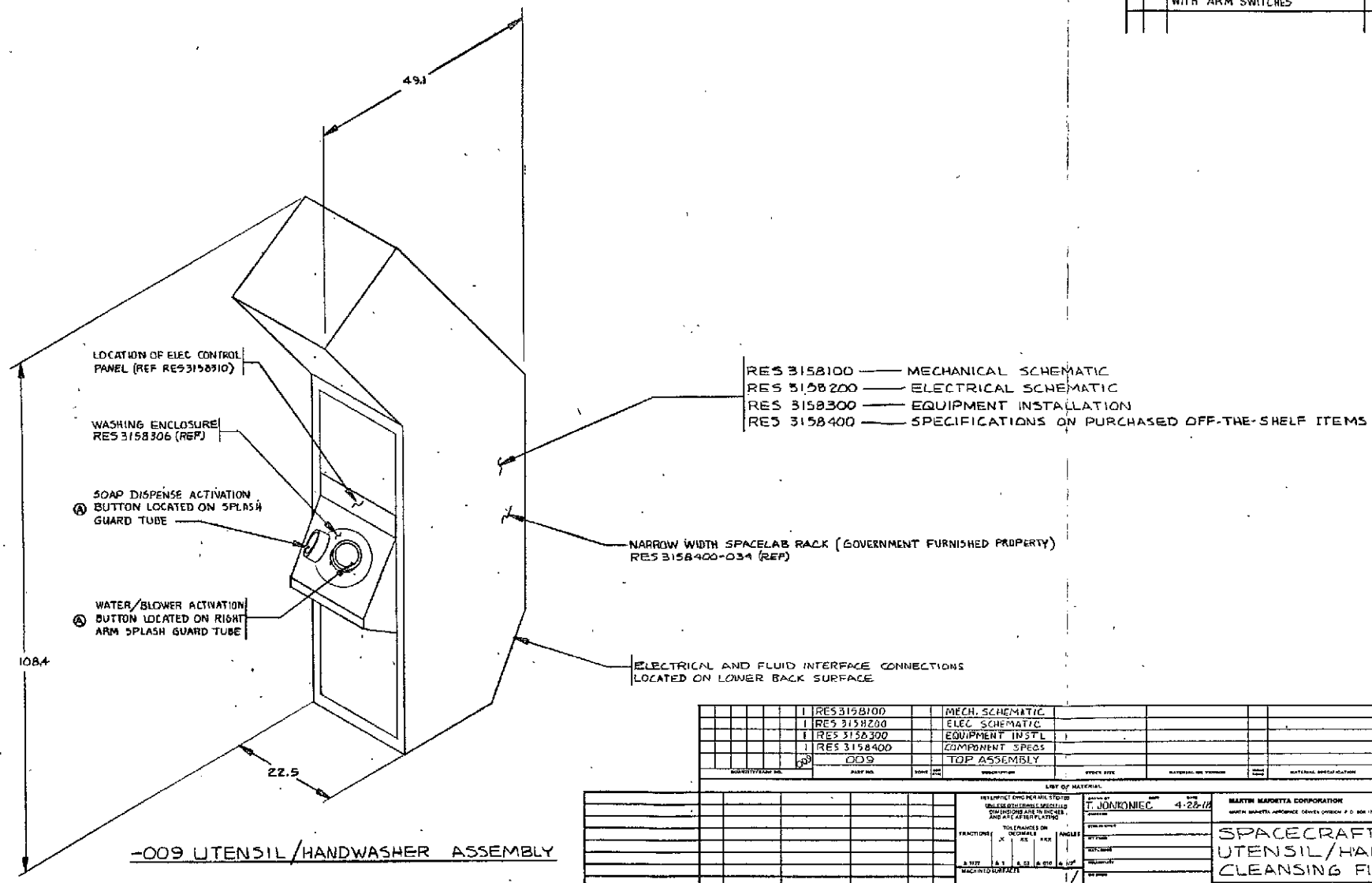


-009 UTENSIL/HANDWASHER ASSEMBLY

| QUANTITY/EACH NO. | PART NO. | ZONE | DESCRIPTION | STOCK SIZE | MATERIAL NO. TYPE/GRADE | MATERIAL SPECIFICATION | FINISH CODE MFR CODE |
|---|---|---|---|---|---|---|---|
| 1 | RES3158100 | | MECH. SCHEMATIC | | | | |
| 1 | RES 3158200 | | ELEC. SCHEMATIC | | | | |
| 1 | RES 3158300 | | EQUIPMENT INSTL | | | | |
| 1 | RES 3158400 | | COMPONENT SPECS | | | | |
| 1 | 009 | | TOP ASSEMBLY | | | | |

LIST OF MATERIAL

UNLESS OTHERWISE SPECIFIED DIMENSIONS ARE IN INCHES AND ARE AFTER PLATING

TOLERANCES ON DECIMALS: .X ±.1, .XX ±.03, .XXX ±.010, ANGLES ±1/2°

MACHINED SURFACES

DRAWN BY T. JONKONIEC DATE 4-28-78

G.G. Ramey 5-2-78

MARTIN MARIETTA CORPORATION
MARTIN MARIETTA AEROSPACE DENVER DIVISION P.O. BOX 179 DENVER, COLORADO 80201

SPACECRAFT UTENSIL/HAND CLEANSING FIXTURE

SIZE D CODE IDENT NO. 04228 RES3158000

SCALE 1/10 SHEET 1 OF 1

RES 3158000 SHT 1

3

FOLDOUT FRAME 1

ORIGINAL PAGE IS OF POOR QUALITY

FOLDOUT FRAME 2

| REVISIONS | | | | |
|---|---|---|---|---|
| SYM. | ZONE | DESCRIPTION | DATE | APPROVED |
| A | C5 | REMOVED KNEE VALVE IN WATER LINE | 016 BY TGJ 7-6-78 | G.G. Rosenberg 7-27-78 |
| | C6 | ADDED BALL VALVE IN SOAP LINE | | |

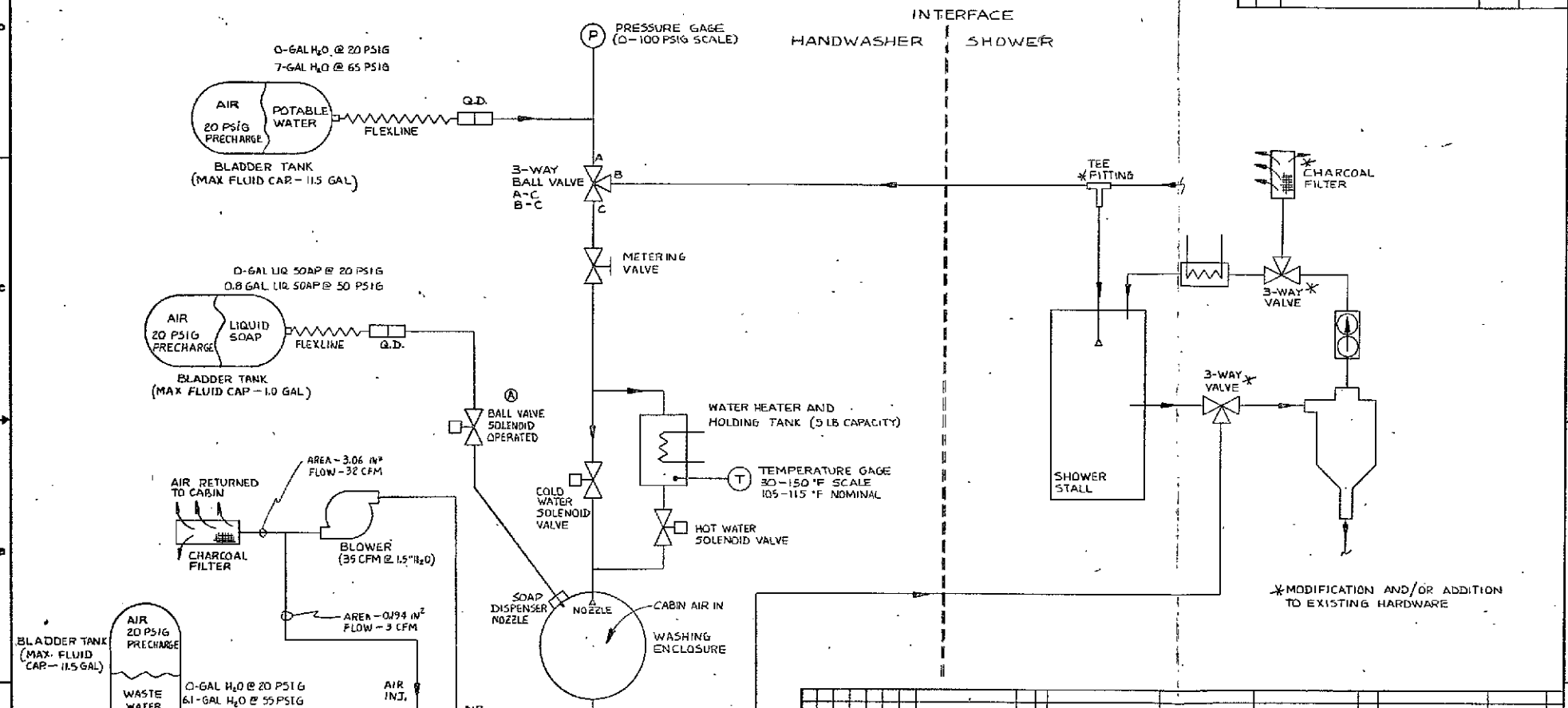


| QUANTITY/CABIN NO. | PART NO. | DEPA | DEPA | DESCRIPTION | STOCK SIZE | MATERIAL ON VENDOR | | MATERIAL SPECIFICATION | PARTS OR TYPE CODE | CODE |
|---|---|---|---|---|---|---|---|---|---|---|

LIST OF MATERIAL

INTERPRET DWG PER MIL STD 100
UNLESS OTHERWISE SPECIFIED DIMENSIONS ARE IN INCHES AND ARE AFTER PLATING
FRACTIONS ± 1/32 | DECIMALS .X ± .1 .XX ± .03 .XXX ± .010 | ANGLES ± 1/2°
MACHINED SURFACES 125
MIL-T-5900 STATUS
INTERCHANGEABLE
REPLACEABLE
AUTOMATICALLY

DRAWN BY T. JONKONIEC REV DATE 5-1-78
G.G. Rosenberg 5-2-78

MARTIN MARIETTA CORPORATION
MARTIN MARIETTA AEROSPACE, DENVER DIVISION, P.O. BOX 179, DENVER, COLORADO 80201

# MECHANICAL SCHEMATIC

SIZE D | CODE IDENT NO. 04236 | RES 3158100

SCALE ~ | SHEET 1 OF 1

THE 3158100

ORIGINAL PAGE IS
OF POOR QUALITY

FOLDOUT FRAME

FOLDOUT FRAME 2

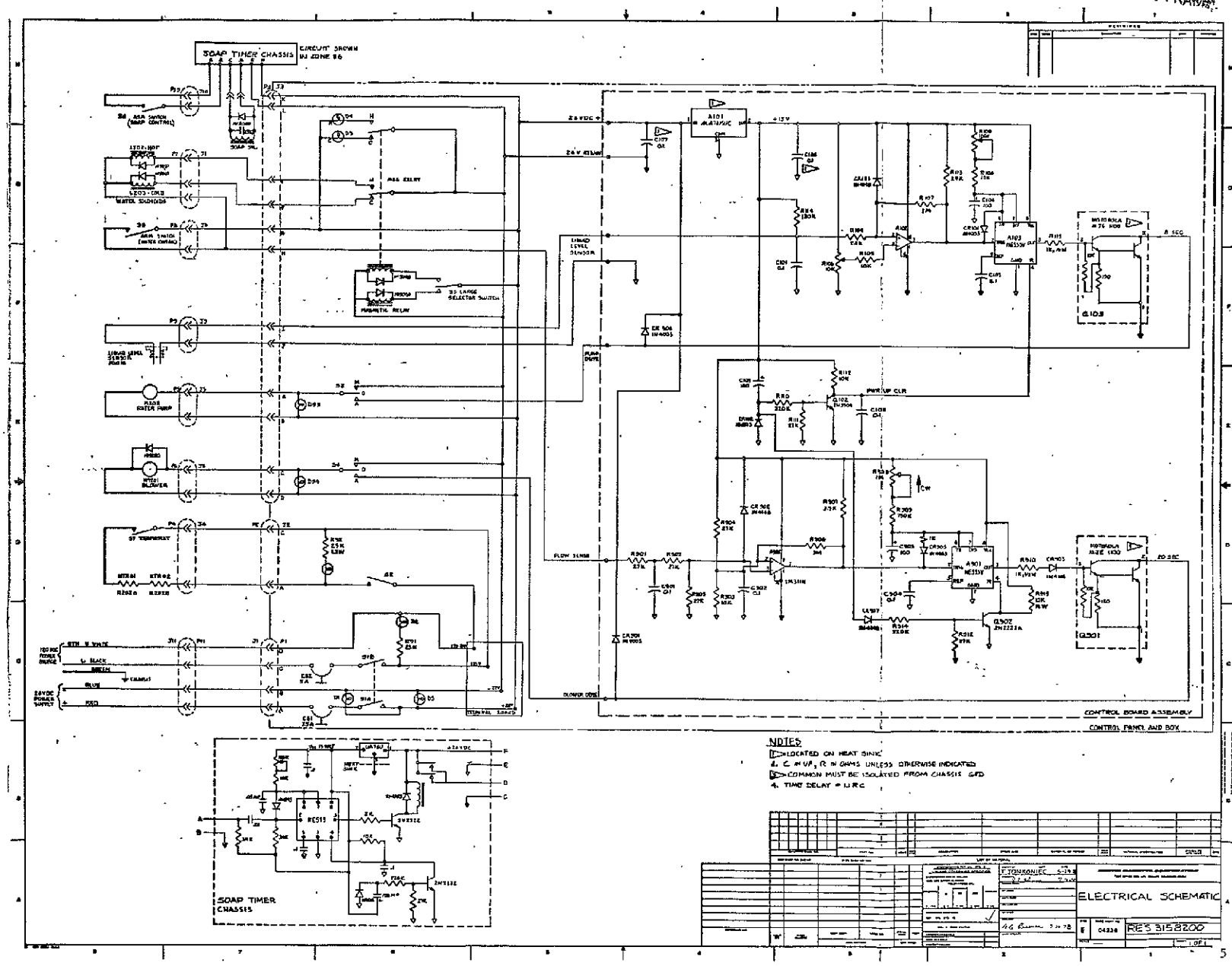

FOLDOUT FRAME 1

ORIGINAL PAGE IS
OF POOR QUALITY

FOLDOUT FRAME 2

| LTR | ZONE | DESCRIPTION | DATE | APPROVED |
|---|---|---|---|---|
| A | B7 | REMOVED LEG SWITCH DEVICES<br>REMOVED ITEM RES3158303-009 | CHG BY TGT 7-6-78 | G.G. [illegible] 7-20-78 |

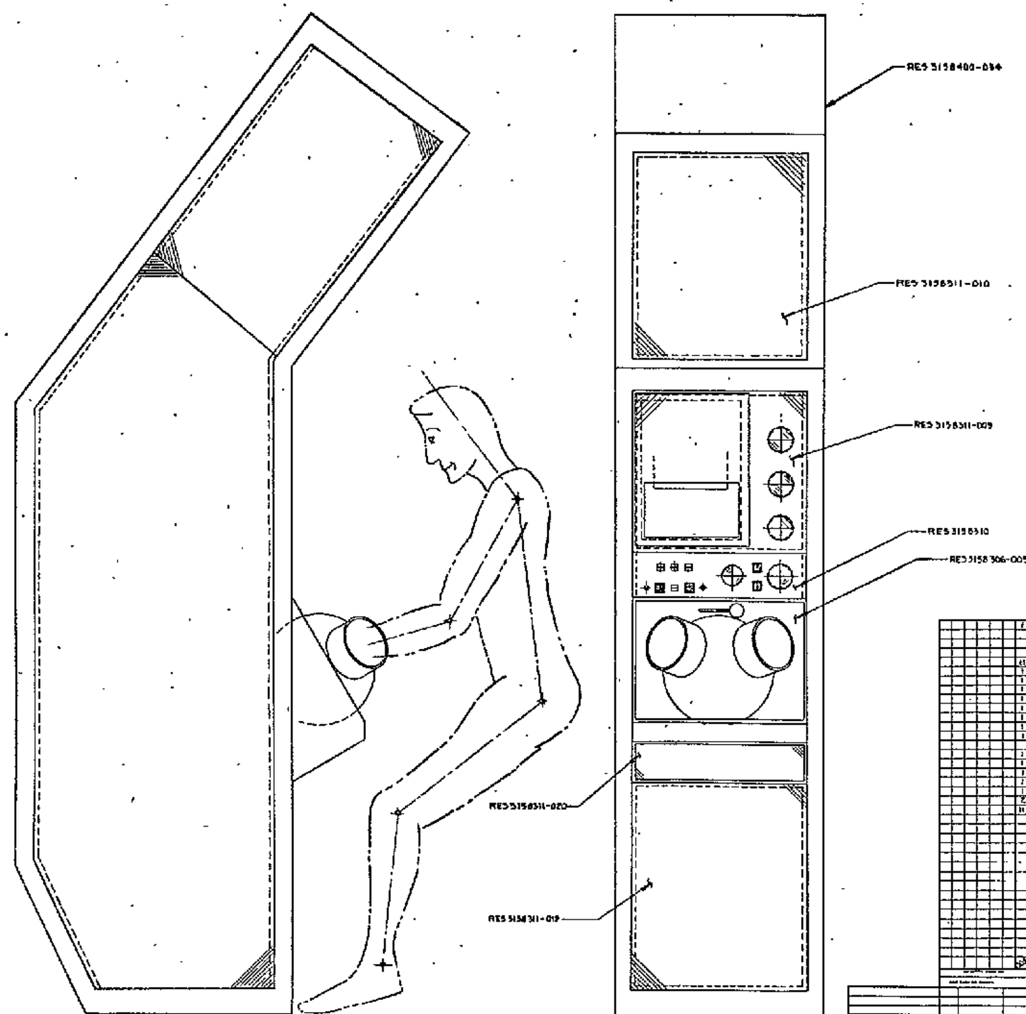


-009 HANDWASHER COMPONENT INSTALLATION

(SEE SHT 2 FOR DESCRIPTION OF UNIT WITH EXTERNAL PANELS REMOVED)

SEE RES 3158316 FOR ROUTING OF SOAP SUPPLY LINE.
SEE RES 3158315 FOR ROUTING OF WASTE WATER LINE
SEE RES 3158314 FOR ROUTING OF SUPPLY WATER LINE

| QTY | PART NO. | DESCRIPTION |
|---|---|---|
| 1 | RES 3158400-034 | NARROW SPACELAB RACK |
| 11 | RES 3158315-009 | SUPPORT-LOCK BLOCK ASSY |
| 1 | RES 3158317-009 | WATER PUMP ASSY |
| 1 | RES 3158313-009 | HOT WATER HOLDING TANK AND HEATING ASSEMBLY |
| 1 | RES 3158312-009 | GRID FILTER INSTL |
| 1 | RES 3158311-020 | PANEL ASSY |
| 1 | RES 3158311-019 | PANEL ASSY |
| 1 | RES 3158311-010 | PANEL ASSY |
| 1 | RES 3158311-009 | PANEL ASSY |
| 1 | RES 3158310-009 | ELECTRICAL CONTROL BOX AND DISPLAY |
| 1 | RES 3158308-009 | SOAP ACTIVATION ASSEMBLY |
| 1 | RES 3158306-009 | WASHING ENCLOSURE ASSEMBLY |
| 1 | RES 3158305-009 | AIR PURGE SUBSYSTEM ASSEMBLY |
| 1 | RES 3158404-009 | LIQUID GAS SEPARATOR ASSEMBLY |
| 1 | RES 3158303-009 | SMALL BLADDER TANK ASSEMBLY |
| 2 | RES 3158302-009 | LARGE BLADDER TANK ASSEMBLY |
| 11 | RES 3158301-001 | STRUCTURAL ATTACHMENT BEAM |
|  | -009 | COMPONENT INSTL |

LIST OF MATERIAL

| | |
|---|---|
| DRAWN | F. ZONVONEC 4-11-78 |
| APPROVED | G G [illegible] 5-? 78 |
| COMPANY | MARTIN MARIETTA CORPORATION |
| TITLE | HANDWASHER COMPONENT INSTL |
| SIZE | E |
| CODE IDENT NO. | 04236 |
| DWG NO. | RES 3158300 |
| SCALE | 1/4 |
| SHEET | 1 OF 2 |

FOLDOUT FRAME 1

ORIGINAL PAGE IS
OF POOR QUALITY

FOLDOUT FRAME 2

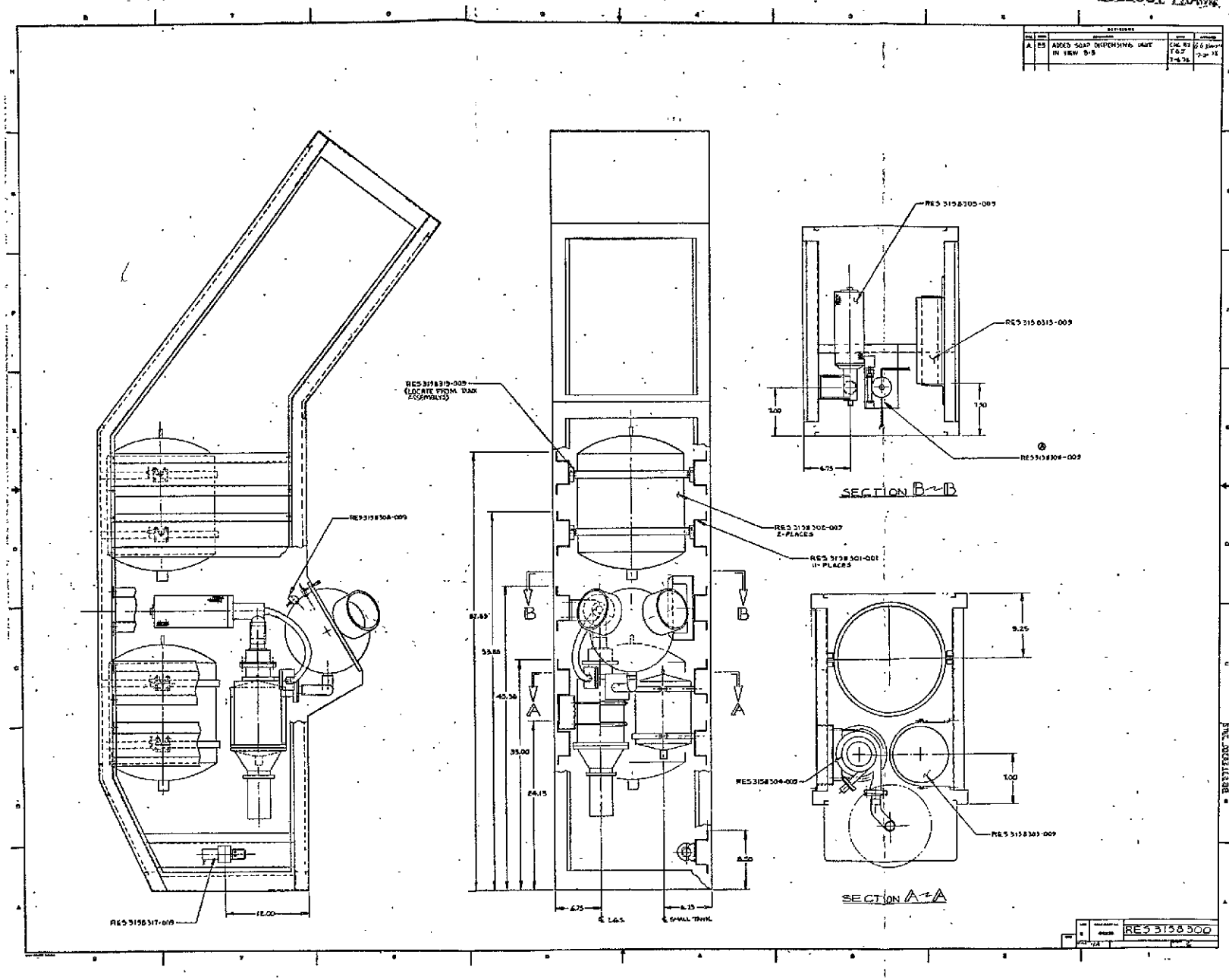

ORIGINAL PAGE IS OF POOR QUALITY

FOLDOUT FRAME 1

FOLDOUT FRAME 2

| REVISIONS | | | | |
|---|---|---|---|---|
| SYM | ZONE | DESCRIPTION | DATE | APPROVED |

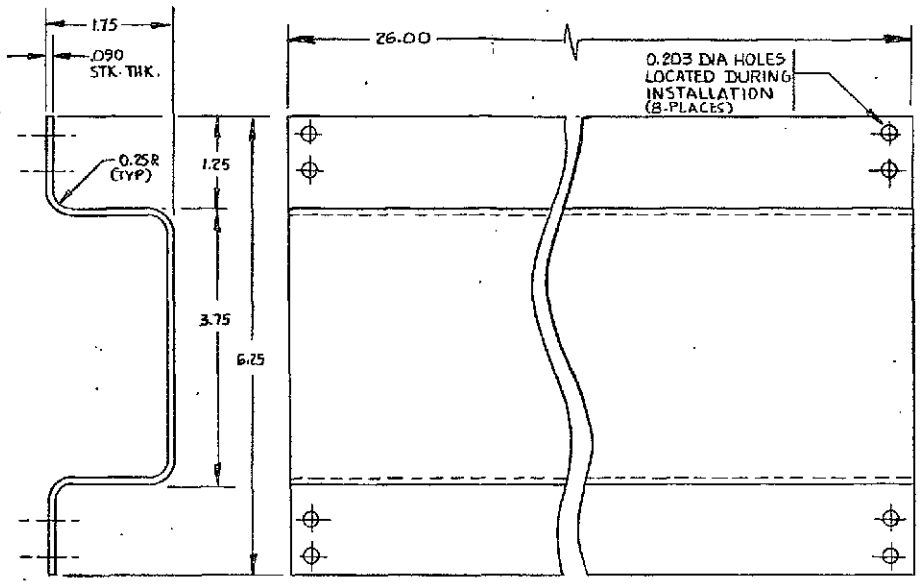


-001 BEAM

RE23158301 2ALT

| QUANTITY/DASH NO | PART NO. | ZONE | SYM | DESCRIPTION | STOCK SIZE | MATERIAL OR VENDOR | MFRS CODE | MATERIAL SPECIFICATION | FINISH OR MFR CODE | CHG |
|---|---|---|---|---|---|---|---|---|---|---|
| | 001 | | | BEAM | 0.090X12X27 | 6061-T4 ALUM | | | IRIDITE | |

ODD DASH NO SHOWN — EVEN DASH NO. OPP — LIST OF MATERIAL

| EFFECTIVE ON | CALC WT | DASH NUMBER | NEXT ASSY | USED ON | FINAL ASSY | TEST |
|---|---|---|---|---|---|---|
| | | | APPLICATION | | QTY REQD | |

DIMENSIONING REF MIL-STD-8
UNLESS OTHERWISE SPECIFIED
DIMENSIONS ARE IN INCHES AND ARE AFTER PLATING
TOLERANCES ON:

| FRACTIONS | DECIMALS .X | .XX | .XXX | ANGLES |
|---|---|---|---|---|
| ± 1/32 | ± .1 | ± .03 | ± .010 | ± 1/2° |

MACHINED SURFACES
REF: MIL-STD-10
MIL-I-8500 STATUS
INTERCHANGEABLE
REPLACEABLE
UNCONTROLLED

DRAWN BY T. JONKONIEC DATE 3-23-78
CHECKED
STRESS CHECK
WT CHECK
MAT'L CHECK
TECHNOLOGY
REVIEWED
PROJECT A. A. Ramer 5-2-78
DUTY ENGINEER

MARTIN MARIETTA CORPORATION
POST OFFICE BOX 179 DENVER COLORADO

STRUCTURAL ATTACHMENT BEAM

SIZE C | CODE IDENT NO 04236 | RES3158301

SCALE FULL | SHEET 1 OF 1

GEN 261905 (6 64)

FOLDOUT FRAME 1

ORIGINAL PAGE IS OF POOR QUALITY

FOLDOUT FRAME 2

| REVISIONS | | | | |
|---|---|---|---|---|
| SYM. | ZONE | DESCRIPTION | DATE | APPROVED |
| A | 6A L/N | ADDED RES 3158400-042 | CHG BY TGJ 7-6-78 | GG Rainer 7-20-78 |

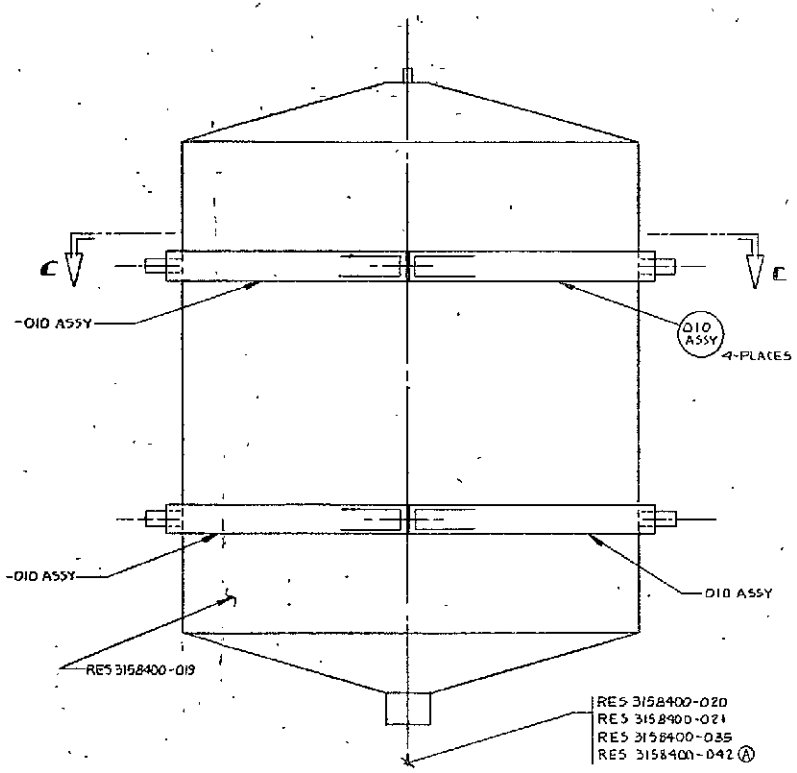


-009 TANK ASSY
SCALE 1/2

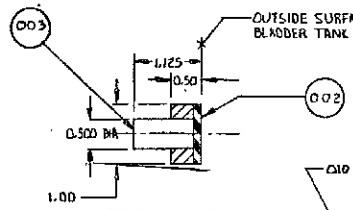


SECTION A~A
SCALE ~ FULL

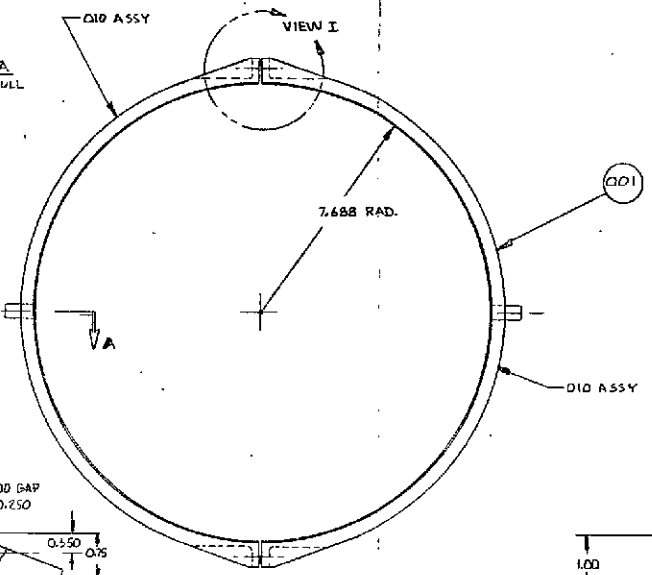


SECTION C~C

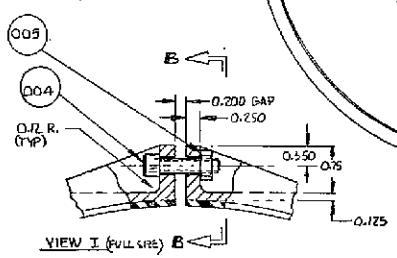


VIEW I (FULL SIZE) B

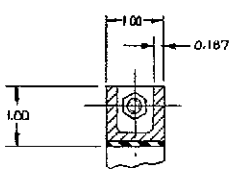


SECTION B~B (FULL SIZE)

| QUANTITY/EAST. REQ. | | | | PART NO. | ZONE | SYM. | DESCRIPTION | STOCK SIZE | MATERIAL OR VENDOR | SYM. ZONE | MATERIAL SPECIFICATION | FINISH OR SPEC. CODE | C-NO. |
|---|---|---|---|---|---|---|---|---|---|---|---|---|---|
| | | | 1 | RES 3158400-042 | | | PIPE COUPLING | CAJON # 16-RCB-316 | | | | | |
| | | | 1 | RES 3158400-035 | | | QUICK DISCONNECT | SWAGELOK # SS-QC4-D-400 | | | | | |
| | | | 1 | RES 3158400-021 | | | FLEX LINE | SWAGELOK # SS-4HO-1-4-SS | | | | | |
| | | | 1 | RES 3158400-020 | | | PIPE BUSHING | 1" MPT TO 1/4" FPT | | | | | |
| | | | 1 | RES 3158400-019 | | | BLADDER TANK | WELL-X-TROL # WX-200 | | | | | |
| | | | 4 | 005 | | | NUT | 1/4-20 THD | CRES | | | | |
| | | | 4 | 004 | | | SOCKET HD CAP SCREW | 1/4-20 THD x 1" LG | CRES | | | | |
| | | 1 | | 003 | | | PIN | 1/2 DIA x 1" LNG | DOWEL PIN | | | | |
| | | 1 | | 002 | | | LINER | 1/8 THK x 1 x 26 | RUBBER | | | | |
| | | 1 | | 001 | | | RING | 1 x 3 x 18 | 6061-T6 ALUM | | | TRIDITE | |
| | | | 4 | 010 | | | HALF RING ASSY | | | | | | |
| | | 00 | 09 | 009 | | | TANK ASSEMBLY | | | | | | |

LIST OF MATERIAL

INTERPRET DWG PER MIL-STD-100
UNLESS OTHERWISE SPECIFIED DIMENSIONS ARE IN INCHES AND ARE AFTER PLATING

TOLERANCES ON DECIMALS: .X ±.1, .XX ±.03, .XXX ±.010; FRACTIONS ±1/32; ANGLES ±1°

MACHINED SURFACES ✓

MFG. & ENGG STATUS: INTERCHANGEABLE / REPLACEABLE / UNCONTROLLED

DRAWN BY T. JONKONIEC

CHECKED

ENGR

MFG ENGR

MATERIALS

SR ENGR

PROJECT

J S Rainer 5-2-78

CHIEF ENGINEER

MARTIN MARIETTA CORPORATION
MARTIN MARIETTA AEROSPACE, DENVER DIVISION P.O. BOX 179, DENVER, COLORADO 80201

LARGE BLADDER TANK ASSEMBLY

SIZE D | CODE IDENT NO. 04236 | RES 3158302

SCALE NOTED | SHEET 1 OF 1

DRAWING AS SHOWN

DOD DI-E607(7-76)

9

FOLDOUT FRAME 1

ORIGINAL PAGE IS OF POOR QUALITY

FOLDOUT FRAME 2

ORIGINAL PAGE IS OF POOR QUALITY

ORIGINAL PAGE IS OF POOR QUALITY

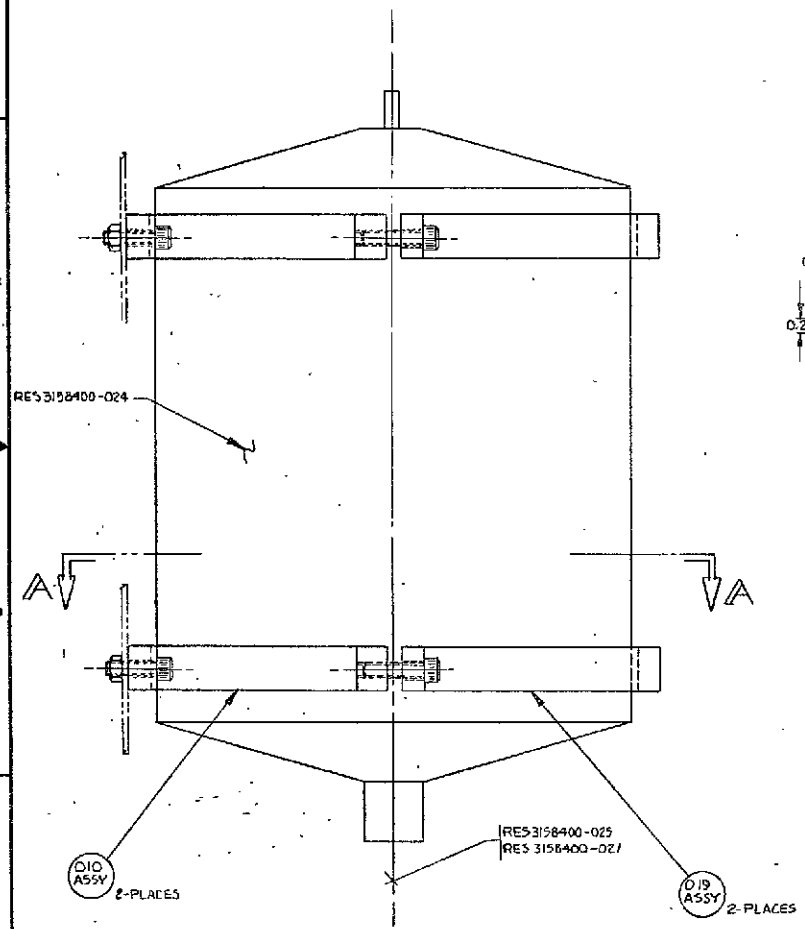


-009 TANK ASSY

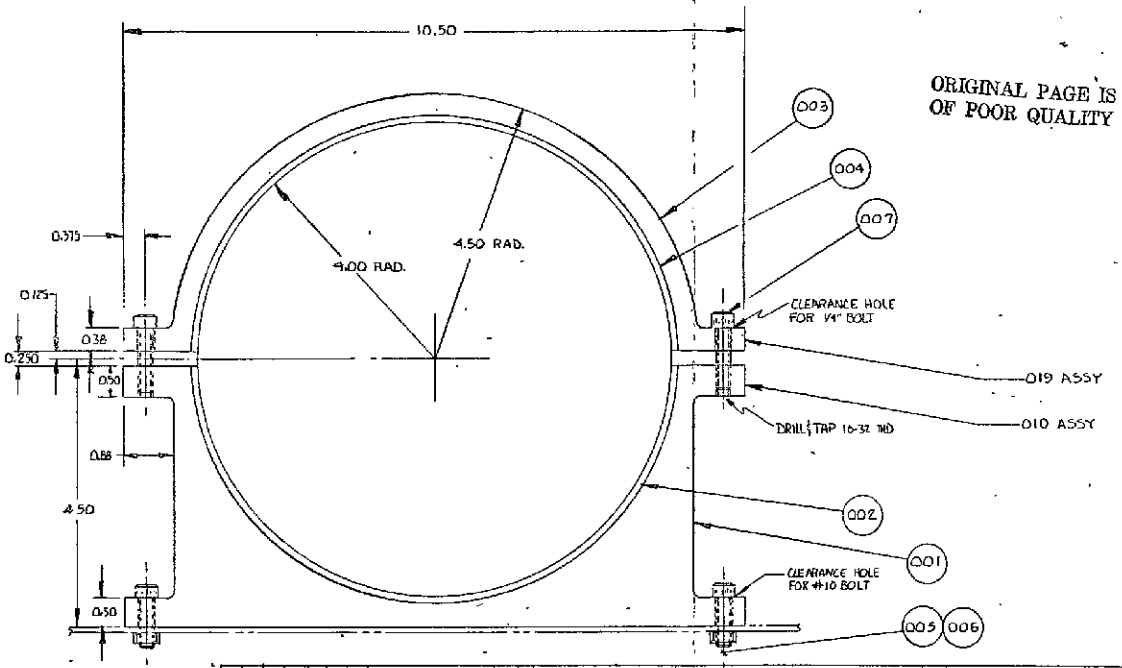


SECTION A-A

(ROTATED CCW 90°)

| QUANTITY/BASIS NO. | | | | | | PART NO. | SYM | DESCRIPTION | STOCK SIZE | MATERIAL OR VENDOR | | MATERIAL SPECIFICATION | FINISH OR SURF. CODE | CPN |
|---|---|---|---|---|---|---|---|---|---|---|---|---|---|---|
| | | | | | 1 | RES 3158400-021 | | FLEX LINE | SWAGELOK #SS-QC4-B-400 | | | | | |
| | | | | | 1 | RES 3158400-025 | | PIPE REDUCER | 3/4 X 1/4 | | | | | |
| | | | | | 1 | RES 3158400-024 | | BLADDER TANK | WELL-X TROL #101 | | | | | |
| | | | | | 4 | 007 | | SOCKET HD CAP SCREW | 10-32 THD x 1" LONG | | | | | |
| | | | | | 4 | 006 | | SOCKET HD CAP SCREW | 10-32 THD x 7/8" LG | | | | | |
| | | | | | 4 | 005 | | NUT | 10-32 THD | | | | | |
| | | | | 1 | | 004 | | LINER | 7/8 x 1 x 8 | RUBBER | | | | |
| | | | 1 | | | 003 | | PLATE | 3/4 x 5 x 11 | 6061-T6 ALUM | | | IRIDITE | |
| | | 1 | | | | 002 | | LINER | 7/8 x 1 x 8 | RUBBER | | | | |
| | | 1 | | | | 001 | | PLATE | 3/4 x 5 x 11 | 6061-T6 ALUM | | | IRIDITE | |
| | | | | | 2 | 019 | | UPPER BRKT ASSY | | | | | | |
| | | | | | 2 | 010 | | LOWER BRKT ASSY | | | | | | |
| | | | 019 | 010 | 009 | | | TANK ASSEMBLY | | | | | | |

LIST OF MATERIAL

INTERPRET DWG PER MIL-STD-100
UNLESS OTHERWISE SPECIFIED
DIMENSIONS ARE IN INCHES AND ARE AFTER PLATING

TOLERANCE ON DECIMALS: .X ±.1, .XX ±.02, .XXX ±.010
FRACTIONS ±1/32, ANGLES ±10°

MACHINES SURFACES

DRAWN BY T. JONIKONIEC DATE 3-30-78
CHECKED
STRESS ISSUE
MFG ISSUE
DATE APPR
PROJECT ENGR
QA ISSUE
PROJECT G.G. Ramm 5-2-78
DATE APPROVED

MARTIN MARIETTA CORPORATION
MARTIN MARIETTA AEROSPACE, DENVER DIVISION, P.O. BOX 179, DENVER, COLORADO 80201

SMALL BLADDER TANK ASSEMBLY

SIZE D | CODE IDENT NO. 04236 | RES3158303

SCALE | SHEET 1 OF 1

EFFECTIVE SYM | CALC SET | BASIC NUMBER | NEXT ASSY | USED ON | FINAL ASSY | QTY

APPLICATION

REPRODUCIBLE | REPLACEABLE | QA CONTROLLED

THE CORPORATION

10

ORIGINAL PAGE IS
OF POOR QUALITY

FOLDOUT FRAME 1

FOLDOUT FRAME 2

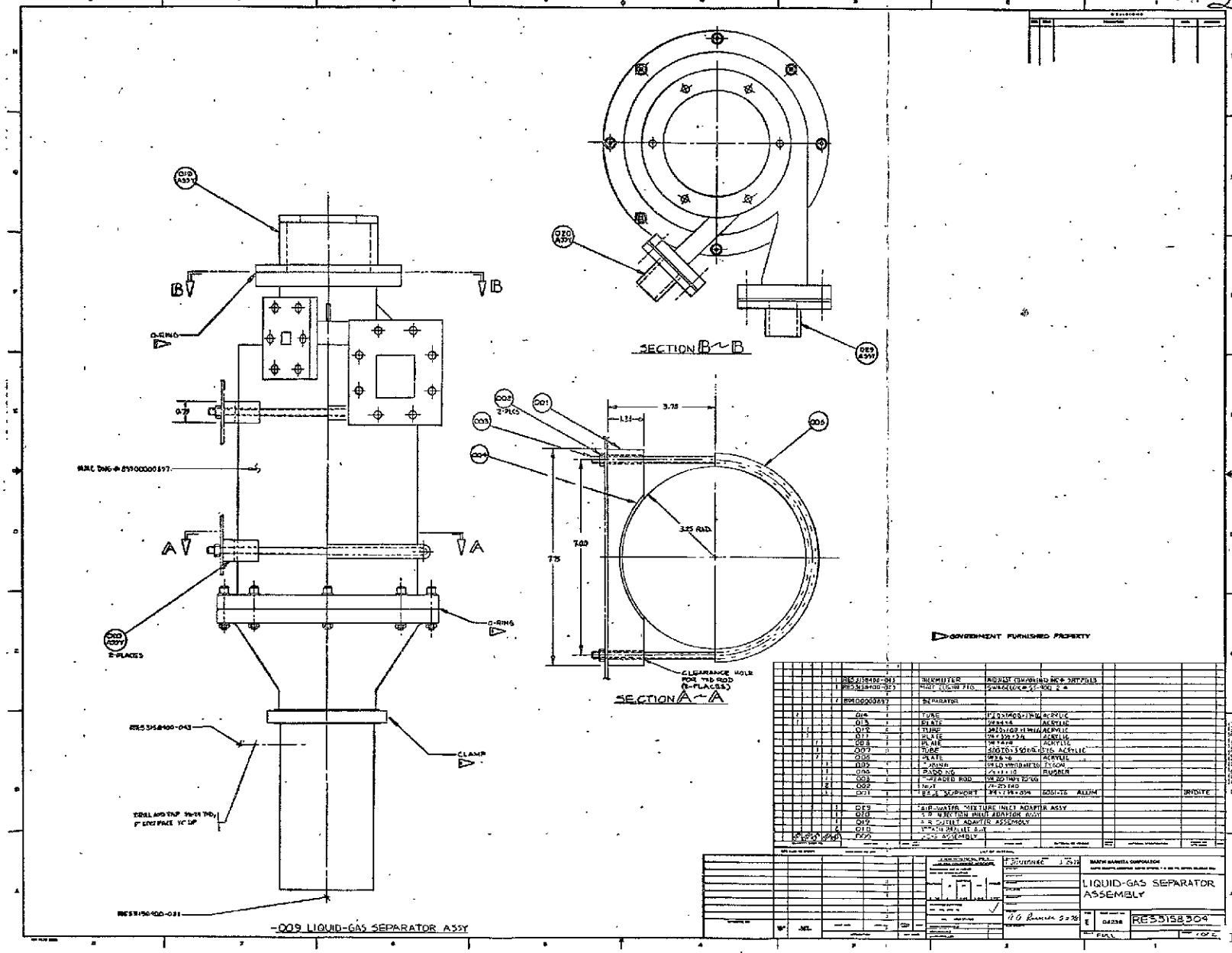

FOLDOUT FRAME 1

FOLDOUT FRAME 2

ORIGINAL PAGE IS OF POOR QUALITY

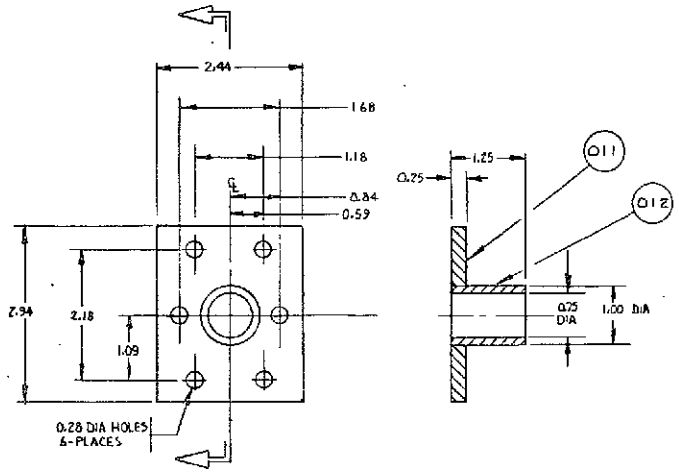


*-020 AIR INJECTION INLET ADAPTER ASSY

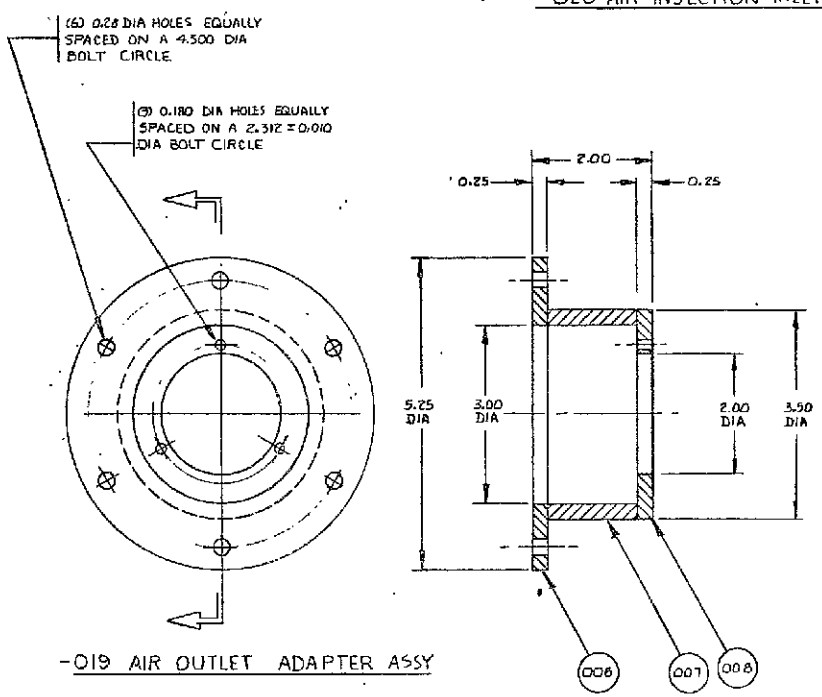


-019 AIR OUTLET ADAPTER ASSY

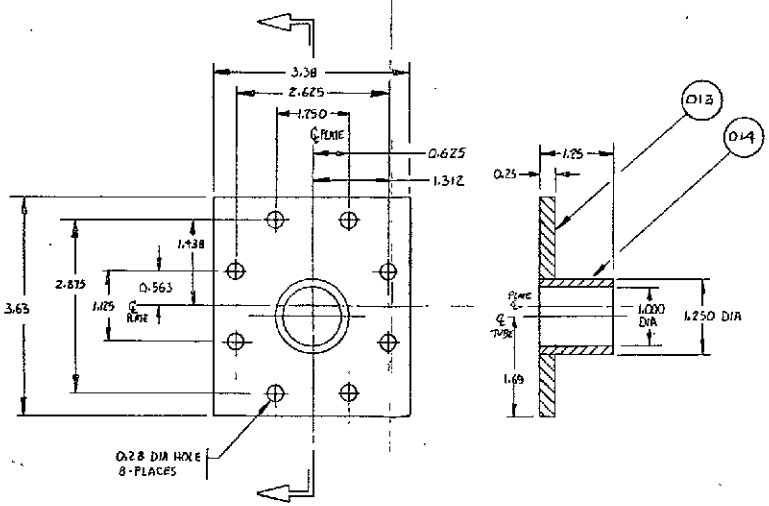


-029 AIR-WATER MIXTURE INLET ADAPTER ASSY

ORIGINAL PAGE IS OF POOR QUALITY

| REVISIONS | | | | |
|---|---|---|---|---|
| SYM | ZONE | DESCRIPTION | DATE | APPROVED |

| SIZE | CODE IDENT NO | |
|---|---|---|
| D | 04236 | RES3158304 |
| SCALE FULL | | SHEET 2 |

SIMC-PASADENA

12

ORIGINAL PAGE IS
OF POOR QUALITY

FOLDOUT FRAME 1

FOLDOUT FRAME 2

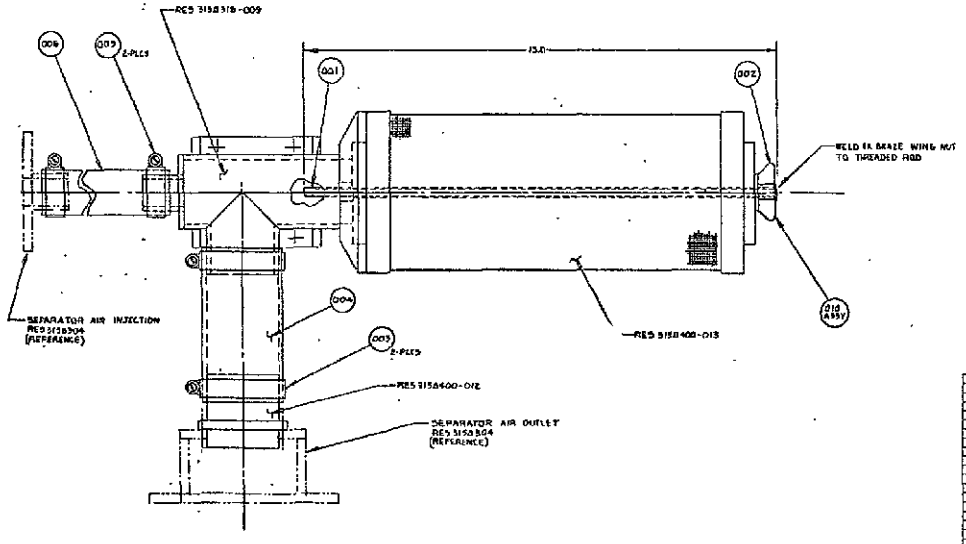


009 AIR SUBSYSTEM ASSEMBLY

NOTE: ADD SPACERS AS REQD AT ATTACHMENT BRACKET DURING ASSEMBLY TO MAINTAIN ALIGNMENT BETWEEN LEG AND AIR INLET

| | | | | | |
|---|---|---|---|---|---|
| 1 | RES3158400-005 | CHARCOAL FILTER | BARNEBY CHEMY # C80296 | | |
| 1 | RES3158400-012 | BLOWER | 3HP, DROSE VANEAXIAL BLOWER W/BASE | | |
| 1 | RES 3158318 | TEE DUCT WELDMENT | | | |
| 1 | 006 | HOSE | 2.0 I.D. x 8 LONG | | |
| 4 | 005 | HOSE CLAMP | 2.9 DIA | STEEL | |
| 1 | 004 | HOSE | 2.10 x 6 LONG | SILICONE, SMOOTH BORE | |
| 2 | 003 | HOSE CLAMP | 2.4 DIA | STEEL | |
| 1 | 002 | WING NUT | 1/4-20 TYP | STEEL | |
| 1 | 001 | THDLD ROD | 1/4-20 TYP DIA | MILD COLD ROD, STEEL | |
| 1 | 010 | HOLD DOWN BOLT | | | |
| 1 | 009 | AIR SUBSYSTEM ASSY | | | |

| | | | |
|---|---|---|---|
| TOLERANCES | 3-26-80 | AIR PURGE SUBSYSTEM ASSEMBLY | |
| D.G. Rousell 5-13 | | E 06238 | RES3158305 |
| | | Full | SHT 1 OF 1 |

13

| REVISIONS | | | | |
|---|---|---|---|---|
| A | E8 | REPLACED RES 3158301-009 WITH RES 3158306 005 ADDED DETAIL - D14 | CAG | 7-6-78 |

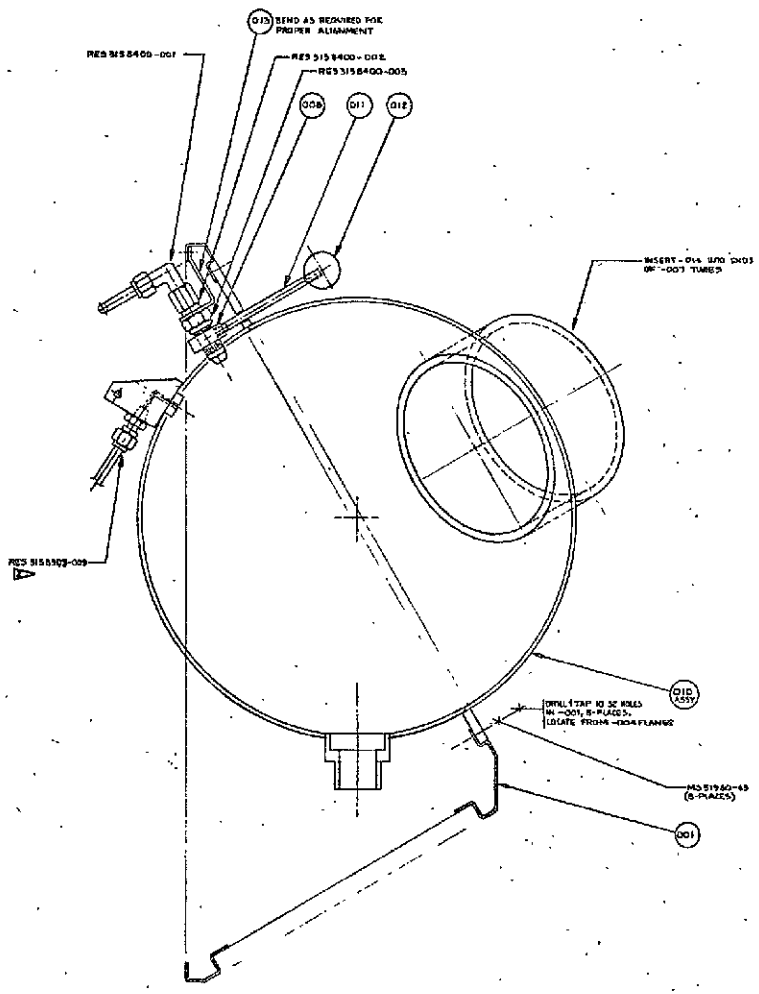


-009 WASHING ENCLOSURE ASSEMBLY
(CROSS-SECTIONAL VIEW)

## GENERAL NOTES

1. BREAK ALL SHARP EDGES

## FLAGNOTES

1. ALL SURFACES TO BE PAINTED, COLOR AND TEXTURE TO MATCH FINISH ON SPACELAB RACK.
2. COMMERCIAL EQUIVALENT ACCEPTABLE
3. APPLY SILICONE SEALANT BETWEEN DISPENSER AND SPHERE DURING INSTALLATION
4. INTERIOR SURFACE OF SPHERE TO BE SMOOTH AND CONTINUOUS. -007 AND -002 TO BE FLUSH WITH INTERIOR SURFACE. SEAM BETWEEN -005 AND -006 TO BE FILLED WITH BONDING AGENT TO MAINTAIN SMOOTH AND CONTINUOUS INTERIOR SURFACE
5. IRIDITE ALL ALUMINUM PARTS

| | | | | | | | | |
|---|---|---|---|---|---|---|---|---|
| | 8 | MS 51960-63 | | 6-32 FLAT HD SCREW | 10-32 TUBE 7/16 | RECESSED CROSS HOLES | 5 | |
| | 1 | RES 3158400-003 | | WATER NOZZLE | 1/4 OD ATTACH | SPRAYING SYSTEMS COMPANY # 5600-AE | | |
| | 1 | RES 3158400-002 | | NOZZLE ADAPTOR | 1/4 F PT x 1/4 TUB | SPRAYING SYSTEMS COMPANY "UNI JET 5009" | | |
| | 1 | RES 3158400-001 | | MALE ELBOW | 1/4 M PT x 1/4 TUBE | SWAGELOK # SS-400-2-2 | | |
| | 1 | RES 3158308 | | SOAP DISPENSER ASSY | | | | |
| | 2 | 014 | 1 | RING | 1/8 x 1/2 | TEFLON | | |
| | | 013 | 1 | BRACKET | 1/8 x 1/2 | ANOD. 7075 ALUM. SHT. | | 5 |
| | | 012 | 1 | KNOB | 1/2 LGTH | SCREW | | |
| | 1 | 011 | 1 | ROD | 3/8 x 3/8 x 1/8 | 304 CRES | | |
| | 1 | 008 | 1 | COLLAR | 1/8 x 3/4 LG | 304 CRES | | |
| 2 | | 007 | 1 | SPLASH GUARD TUBE | 5/8 OD x 5 SPEC | CLEAR ACRYLIC | | |
| 1 | | 006 | 1 | FRONT HEMISPHERE | 1/8 x 8 | CLEAR ACRYLIC | | |
| 1 | | 005 | 1 | BACK HEMISPHERE | 1/8 x 8 | WHITE ACRYLIC | | |
| 1 | | 004 | 1 | FLANGE PLATE | 1/8 x 5 x 7 1/2 | WHITE ACRYLIC | | |
| 2 | | 003 | 1 | FAN BRACKET | 1/8 x 2 x 3 1/2 | CLEAR ACRYLIC | | |
| 1 | | 002 | 1 | DRAIN TUBE | 1/4 ROD x 2 LGTH | CLEAR ACRYLIC | | |
| | | 001 | 1 | SUPPORT ARCT | MEA 35 X 40 | LOW CARBON STL | | 1 |
| | 1 | 010 | | SPHERE ASSY | | | | |
| | | 009 | | WASHING ENCLOSURE ASSY | | | | |

| | | | | | | |
|---|---|---|---|---|---|---|
| -009 | RES 3158306 | 1 | | | G. G. Calvert 5-9-78 | WASHING ENCLOSURE ASSEMBLY |
| | | | | | | E 04236 RES 3158306 |
| | | | | | | SCALE FULL SHEET 1 OF 3 |

FOLDOUT FRAME 1

ORIGINAL PAGE IS
OF POOR QUALITY

FOLDOUT FRAME 2

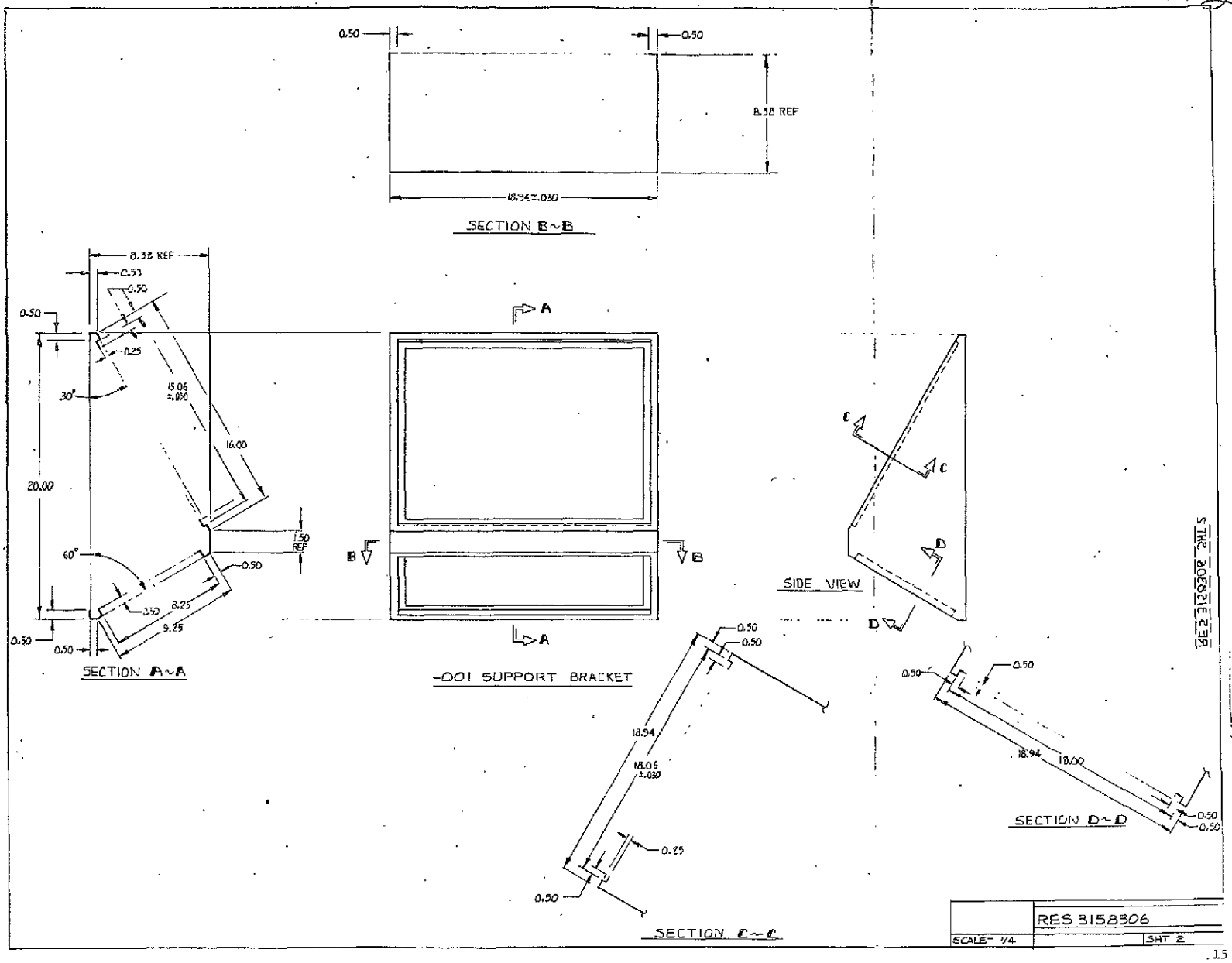

FOLDOUT FRAME 1

ORIGINAL PAGE IS
OF POOR QUALITY

FOLDOUT FRAME 2

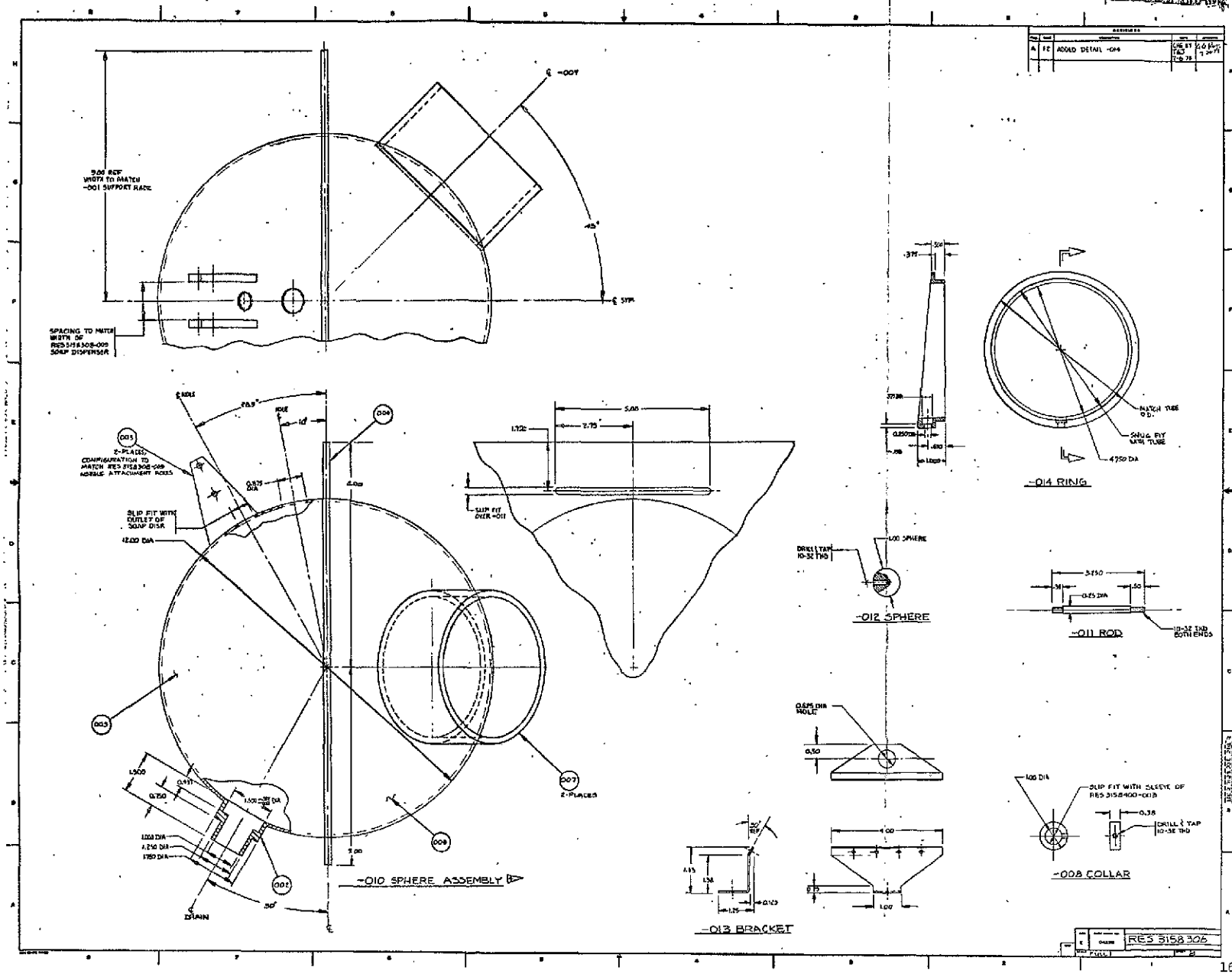

FOLDOUT FRAME 1

FOLDOUT FRAME 2

ORIGINAL PAGE IS
OF POOR QUALITY

| REVISIONS | | | | |
|---|---|---|---|---|
| SYM | ZONE | DESCRIPTION | DATE | APPROVED |
| A | | THIS DRAWING HAS BEEN DELETED AND REPLACED BY REVISED DRAWING RES 3158308 | CHG BY TGO 7-6-78 | G.G. Rodriguez 7-20-78 |

ORIGINAL PAGE IS
OF POOR QUALITY

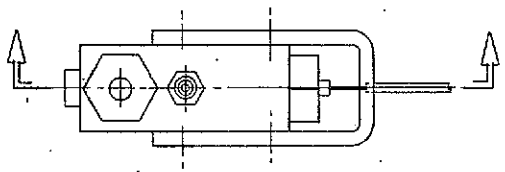

OBSOLETE SHT

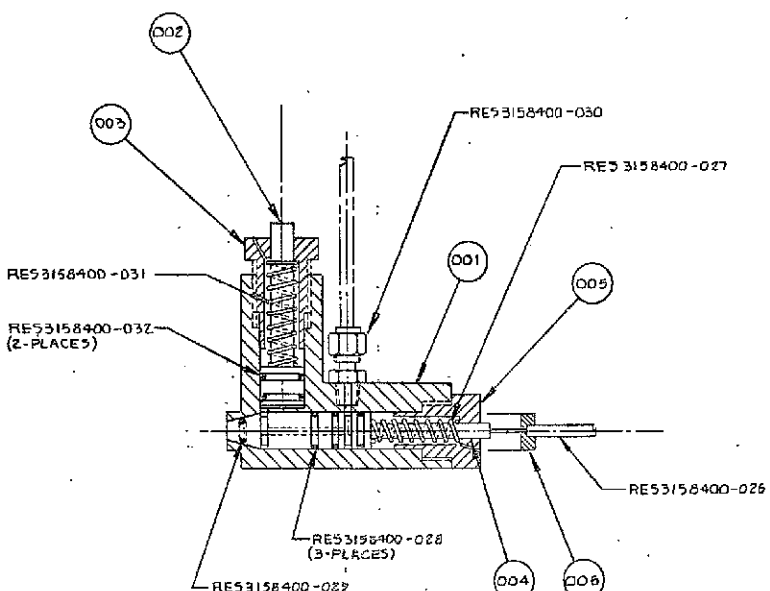


-009 ASSEMBLY

| QUANTITY/EQUIV. NO. | PART NO. | SYMB | SYS | DESCRIPTION | STOCK SIZE | MATERIAL OR VENDOR | | MATERIAL SPECIFICATION | FINISH OR MFR. CODE | |
|---|---|---|---|---|---|---|---|---|---|---|
| 2 | RES3158400-032 | | | O-RING | PARKER # 2-114 | BUNA-N | | | | |
| 1 | RES3158400-031 | | | SPRING. | LEE # LC-0456-12 | | | | | |
| 1 | RES3158400-015 | | | MALE CONNECTOR | SWAGELOK # SS-400-1-2 | | | | | |
| 1 | RES3158400-029 | | | O-RING | PARKER # Z-010 | BUNA-N | | | | |
| 3 | RES3158400-028 | | | O-RING | PARKER # 2-111 | BUNA-N | | | | |
| 1 | RES3158400-027 | | | SPRING | LEE # LC-045E-18 | | | | | |
| 1 | RES3158400-026 | | | CABLE ASSY | BICYCLE BRAKE CABLE ASSY | | | | | |
| 1 | 006 | | | CABLE HOLDER | 1/4 x 3/4 x 10" LG | PVC - SOLID | | | | |
| 1 | 005 | | | POPPET END CAP | 1 3/4 x 1 3/4 x 2 | PVC - SOLID | | | | |
| 1 | 004 | | | POPPET | 3/4 DIA x 5 LONG | LEXAN | | | | |
| 1 | 003 | | | PISTON END CAP | 1 3/4 x 1 3/4 x 2 1/4 | PVC - SOLID | | | | |
| 1 | 002 | | | PISTON | 1" DIA x 3 1/2 LG | LEXAN | | | | |
| 1 | 001 | | | BODY | 1 3/4 x 4 1/4 x 3 3/4 | PVC - SOLID | | | | |
| REF | 009 | | | DISPENSER ASSY | | | | | | |

LIST OF MATERIAL

| | | | | | |
|---|---|---|---|---|---|
| EFFECTIVE ON | CALC. WT. | DWG NUMBER | NEXT ASSY | USED ON | REQD ASSY | TEST |
| | | | APPLICATION | | QTY REQD | |

INTERPRET DWG PER MIL-STD-100
UNLESS OTHERWISE SPECIFIED DIMENSIONS ARE IN INCHES AND ARE AFTER PLATING

| FRACTIONS | TOLERANCES ON DECIMALS .X | .XX | .XXX | ANGLES |
|---|---|---|---|---|
| ± 1/32 | ± .1 | ± .03 | ± .010 | ± 30' |

MACHINED SURFACES ✓

MIL - 1 BASIC STATUS

INTERCHANGEABLE
REPLACEABLE
UNCONTROLLED

DRAWN BY T. JONKONIEC 4-3-78
SPECIFICATION
APPROVED BY
MFG. ENGR.
MATERIALS
PROJECT G.G. Rodriguez 5-2-78
CONTRACT AUTHORITY

MARTIN MARIETTA CORPORATION
MARTIN MARIETTA AEROSPACE DENVER DIVISION, P.O. BOX 179, DENVER, COLORADO 80201

SOAP DISPENSER ASSEMBLY

SIZE D | CODE IDENT NO. 04236 | RES 3158307

SCALE NO SCALE | SHEET 1 OF 2

THIRD ANGLE PROJECTION

17

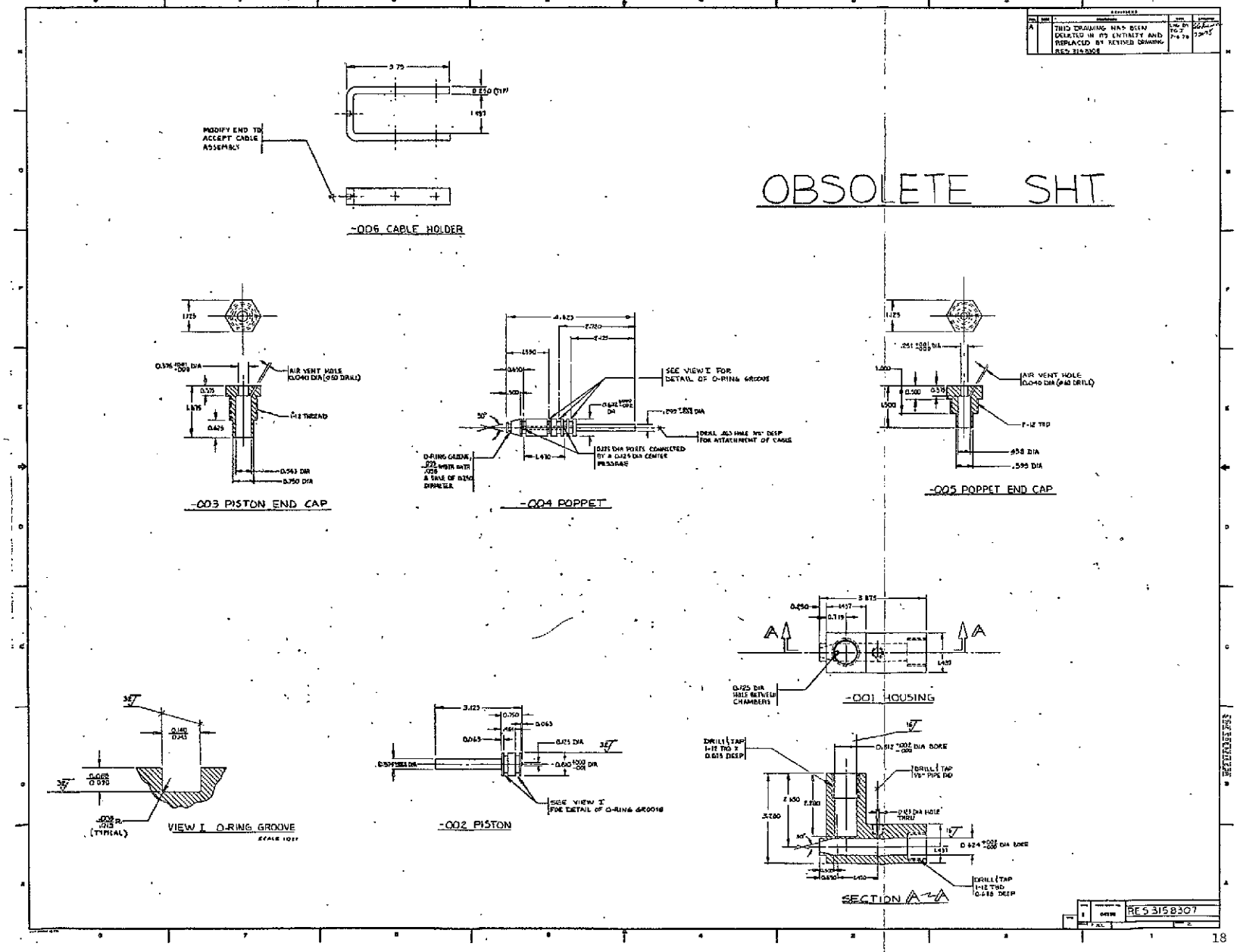
THIS DRAWING HAS BEEN DELETED IN ITS ENTIRETY AND REPLACED BY REVISED DRAWING RES 3158308
OBSOLETE SHT
MODIFY END TO ACCEPT CABLE ASSEMBLY
-006 CABLE HOLDER
AIR VENT HOLE (0.040 DIA (#60 DRILL))
1-12 THREAD
0.563 DIA
0.750 DIA
-003 PISTON END CAP
SEE VIEW I FOR DETAIL OF O-RING GROOVE
DRILL .063 DIA 3/4" DEEP FOR ATTACHMENT OF CABLE
0.125 DIA PORTS CONNECTED BY A 0.125 DIA CENTER PASSAGE
-004 POPPET
AIR VENT HOLE (0.040 DIA (#60 DRILL))
1-12 TRD
.958 DIA
.595 DIA
-005 POPPET END CAP
0.125 DIA HOLE BETWEEN CHAMBERS
-001 HOUSING
VIEW I O-RING GROOVE
SCALE 10:1
SEE VIEW I FOR DETAIL OF O-RING GROOVE
-002 PISTON
DRILL & TAP 1-12 TRD 7 0.625 DEEP
0.812 DIA BORE
DRILL & TAP 1/8" PIPE TRD
0.624 DIA BORE
DRILL & TAP 1-12 TRD 0.688 DEEP
SECTION A-A
RES 3158307

FOLDOUT FRAME 1

FOLDOUT FRAME 2

ORIGINAL PAGE IS OF POOR QUALITY

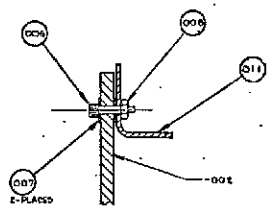


SECTION B-B
(FULL-SIZE)

ORIGINAL PAGE IS OF POOR QUALITY

OBSOLETE SHT

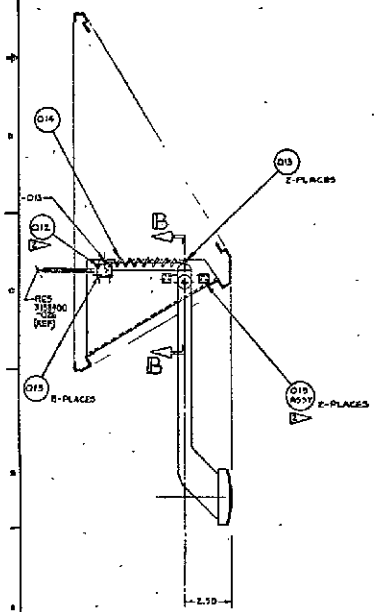


SECTION A-A

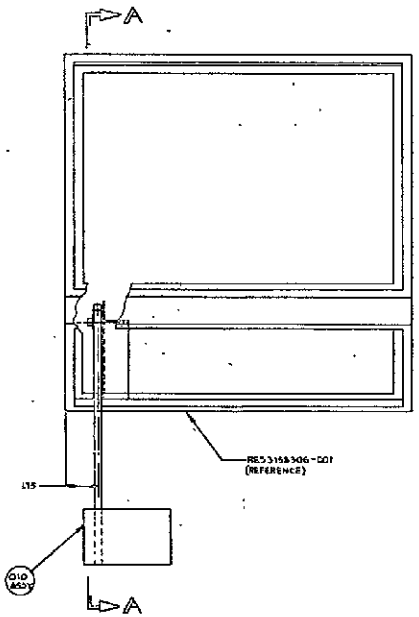


-009 SOAP ACTIVATION ASSY

LOCATE AND ADJUST DURING ASSEMBLY, MATCH DRILL INTO -011 AND TAP 6-32 UNC IN BRACKET

SIZE AND SHAPE TO BE DETERMINED AT INSTALLATION

| | | | | | | | |
|---|---|---|---|---|---|---|---|
| | B | 015 | | SOC HD CAP SCREW | 6-32 UNC × .94 LG | | |
| | 1 | 014 | | SPRING | [illegible] | | |
| | 2 | 013 | | SOC HD CAP SCREW | 6-32 UNC × .75 LG | | |
| | 1 | 012 | | GUIDE, WINDOW ROD | .50 × 1.4 × 1.4 | AL 6061-T6 | |
| | 1 | 011 | | BRACKET | .75 × .8 × .40 | AL 6061-T6 | IRIDITE |
| | 1 | 008 | | NUT | 10-24 UNS | | |
| | 2 | 007 | | WASHER | .94 × 1 × 1 | TEFLON | |
| | | 006 | | SHOULDER BOLT | .94 DIA SHOULDER × .90 LG × 10-24 UNS × .38 LG | | |
| | 1 | 005 | | STOP SCREW | 6-32 × 1.25 SOC HD CAP SCREW | | |
| | 1 | 004 | | BLOCK | .50 × 1.2 × 1.2 | AL 6061-T6 | IRIDITE |
| | 1 | 003 | | BRIDGE | .75 × .375 × .375 | [illegible] | |
| | 1 | 002 | | LEVER | .50 × 3 × .19 | AL 6061-T6 | IRIDITE |
| | 1 | 001 | | PAD | .375 × .375 × .375 | AL 6061-T6 | IRIDITE |
| | 2 | 019 | | STOP BLOCK ASSY | | | |
| | 1 | 010 | | LEVER ASSY | | | |
| | 1 | 009 | | SOAP ACTIVATION ASSY | | | |

ORIGINIC 3 [illegible]

SOAP ACTIVATION ASSEMBLY

E 04839 RES3158308

SHEET 1 OF 2

FOLDOUT FRAME 1

FOLDOUT FRAME 2

ORIGINAL PAGE IS
OF POOR QUALITY

ORIGINAL PAGE IS
OF POOR QUALITY

OBSOLETE SHT

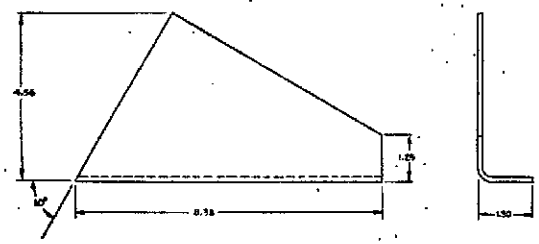


-011 BRACKET

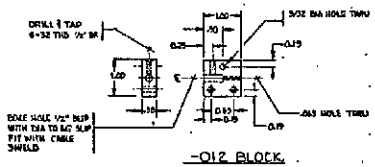


-012 BLOCK

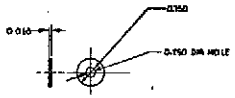


-007 WASHER

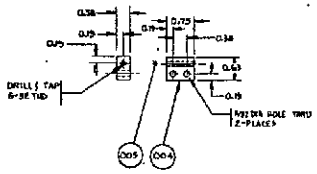


-019 STOP BLOCK ASSY

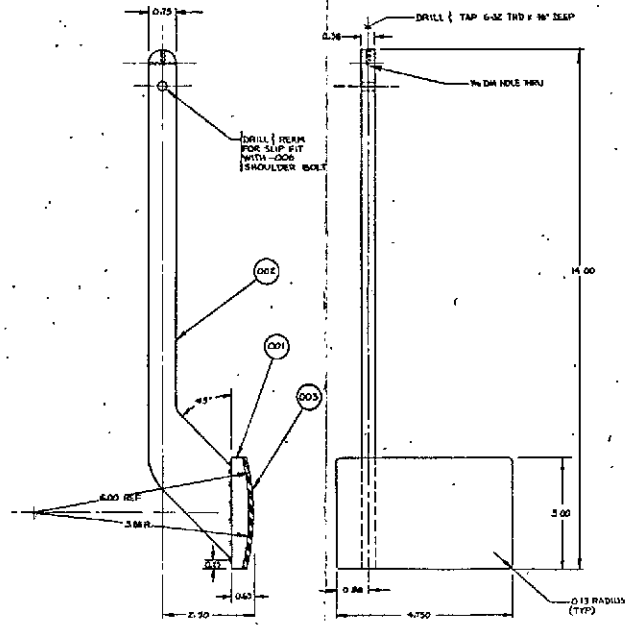


-010 LEVER ASSY

RES 3158308

FOLDOUT FRAME 1

ORIGINAL PAGE IS OF POOR QUALITY

FOLDOUT FRAME 2

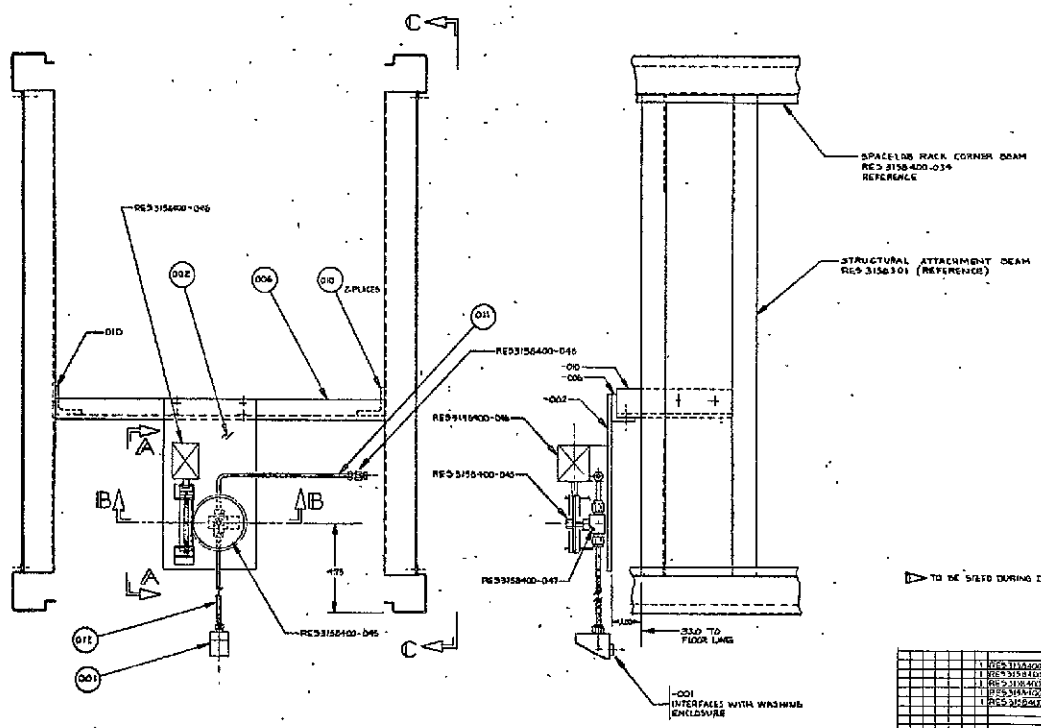


| | | | | | | | |
|---|---|---|---|---|---|---|---|
| 1 | RES3158400-048 | TUBE UNION | SWAGELOK #SS-400-6 | | | | |
| 1 | RES3158400-041 | BALL VALVE | WHITEY B47J4-SS | | | | |
| 1 | RES3158400-046 | SOLENOID | GENISCO #P 10278 | | | | |
| 1 | RES3158400-045 | SPUR GEAR | BOSTON GEARS # Y4844 | | | | |
| 1 | RES3158400-044 | GEAR RACK | BOSTON GEARS # Y48 | | | | |
| 1 | 011 | TUBING | 3/8 OD x 0.035 | 304 STS | | | |
| 2 | 010 | SUPPORT ANGLE | 2x2x1/4x1/2 | AL 6061-T6 | | | 1/8 DIA |
| 1 | 009 | MAGNET | 2x1x1/2 | AL 6061-T6 | | | 1/8 DIA |
| 1 | 007 | EXTENSION SPRING | 1/2 | | | | |
| 1 | 006 | SUPPORT ANGLE | 4x2x1/4x4 1/2 | AL 6061-T6 | | | 1/8 DIA |
| 2 | 005 | GUIDE ANGLE | 3x2x1/4x2 1/2 | AL 6061-T6 | | | 1/2 DIA |
| 1 | 004 | SLIDER BLOCK | 3x1x1/2 | AL 6061-T6 | | | 1/8 DIA |
| 1 | 003 | ACC BRACKET | 6x1x1/4x4 | AL 6061-T4 | | | 1/8 DIA |
| 1 | 002 | BASE PLATE | 24 x 5 x 0.25 | AL 6061-T4 | | | 1/8 DIA |
| 1 | 001 | SOAP NOZZLE | 1/4x1 3/4x2 1/4 | AL 6061-T6 | | | 1/8 DIA |
| 1 | -009 | | | | | | |

F. JONGENELE

SOAP DISPENSING ASSEMBLY

RES3158308A

1 OF 2

ORIGINAL PAGE IS
OF POOR QUALITY



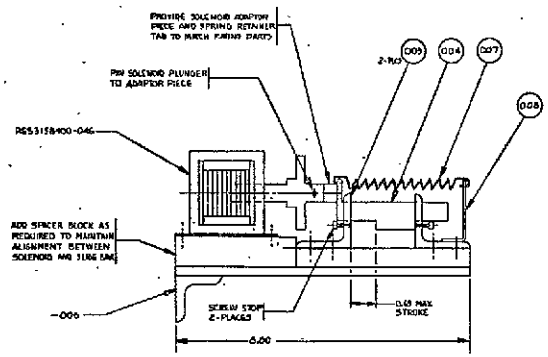


VIEW A~A ROTATED CCW 90°
FULL SIZE

NOTE: SCALE DRAWING FOR NON-CRITICAL DIMENSIONS NOT SHOWN

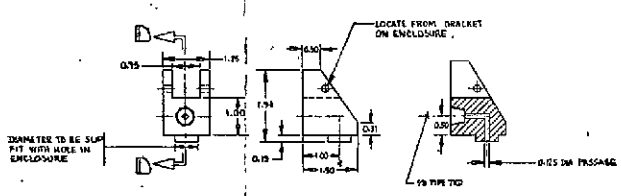


-001 PORT BLOCK

SECTION D~D

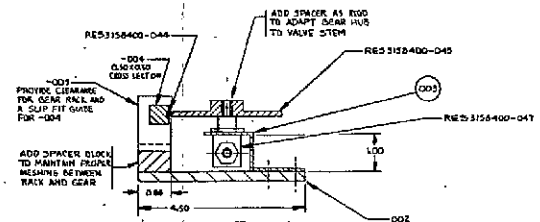


VIEW B~B
FULL SIZE

NOTE: SCALE DRAWING FOR NON-CRITICAL DIMENSIONS NOT SHOWN

RES3158308A

ORIGINAL PAGE IS
OF POOR QUALITY

FOLDOUT FRAME 1

FOLDOUT FRAME 2

| REVISIONS | | | | |
|---|---|---|---|---|
| A | | THIS SHEET HAS BEEN DELETED IN ITS ENTIRETY | ENG BY TGT 7-7-78 | |

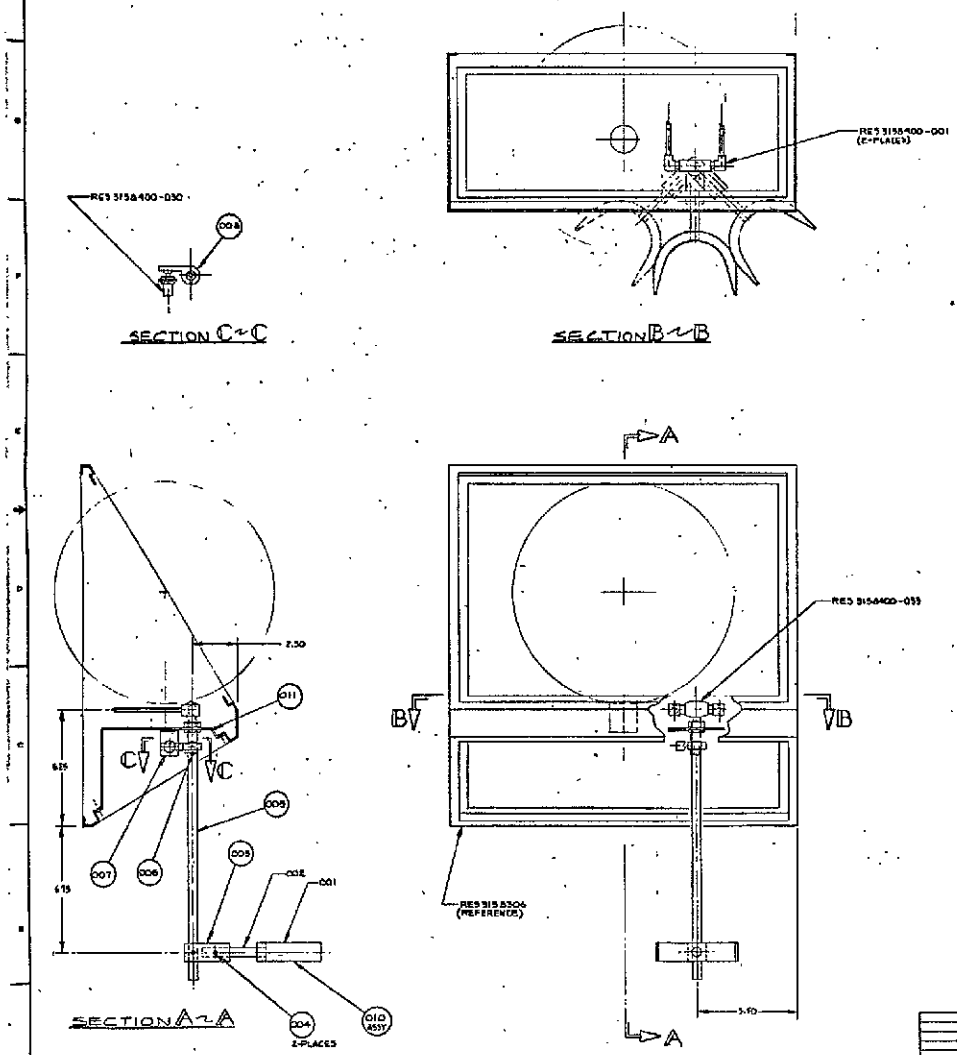


OBSOLETE SHT

| | | | | | | | | | |
|---|---|---|---|---|---|---|---|---|---|
| | 2 | REV 3158400-016 | | MALE ELBOW | SWAGELOK # SS | 400-2-2 | | | |
| | 1 | RES 3158400-020 | | PRESSURE VALVE | BELLOW & SPRING | | | | |
| | 1 | RES 3158400-030 | | FLOW SWITCH | AC-INC #61M190 | | | | |
| | 1 | 011 | 1 | BRACKET | 0.063 SHEET | 6061-T6 ALUM. | | | IRIDITE |
| | 1 | 010 | 1 | TAB FOR LABEL | 0.25 x 1.0 x 3 | 6061-T6 ALUM. | | | IRIDITE |
| | 1 | 007 | 1 | ANGLE | 0.063 x 1.0 x 3 | 6061-T6 ALUM. | | | IRIDITE |
| | 2 | 006 | 1 | SET SCREW | 1/4-20 x 3/4" LG. | | | | |
| | 1 | 005 | 1 | SHAFT | ROD 1.00 x 15.10 | 6061-T6 ALUM. | | | IRIDITE |
| | 2 | 004 | 1 | SET SCREW | 1/4-20 x 3/4" LG. | | | | |
| | 1 | 003 | 1 | SLIDE BLOCK | 1 x 1 x 2.5 | 6061-T6 ALUM. | | | IRIDITE |
| | 1 | 002 | 1 | VORE STEM | 1" OD x 0.50 x 1" LG. | 6061-T6 ALUM. | | | IRIDITE |
| | 1 | 001 | 1 | YOKE | 1 x 1 x 2 | 6061-T6 ALUM. | | | IRIDITE |
| | 1 | 005 | 1 | YOKE WELDMENT | | | | | |
| | AR | 009 | 1 | FLOW VORTEX ASSY | | | | | |

| | | | |
|---|---|---|---|
| | T. SONKONJEC 5-2-78 | WATER FLOW ACTIVATION ASSEMBLY | |
| | Geo Ramsey 5-2-78 | SIZE B CODE RES3158309 | SHEET 1 OF 2 |

FOLDOUT FRAME 1

ORIGINAL PAGE IS
OF POOR QUALITY

FOLDOUT FRAME 2

| REVISIONS | | | | |
|---|---|---|---|---|
| A | | THIS SHEET HAS BEEN DELETED IN ITS ENTIRETY | | |

# OBSOLETE SHT

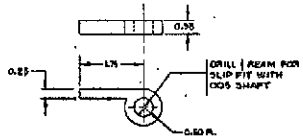


-008 TAB COLLAR

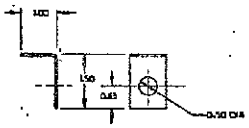


-007 ANGLE

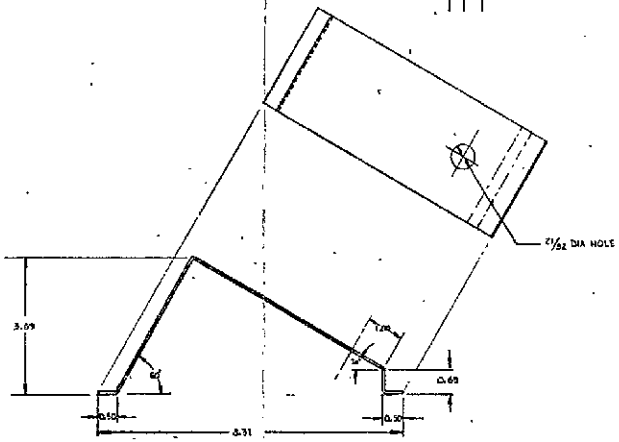


-011 BRACKET

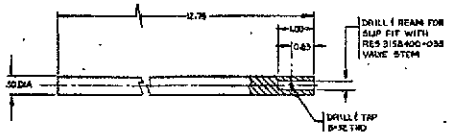


-005 SHAFT

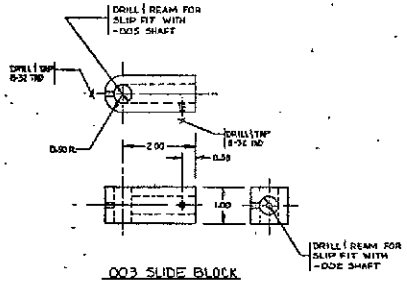


003 SLIDE BLOCK

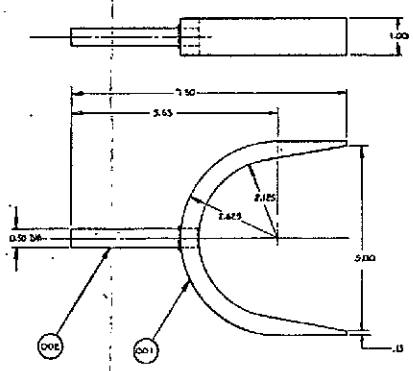


-010 YOKE WELDMENT

| | | | |
|---|---|---|---|
| | | | RES315B309 |
| | | | FULL |

FOLDOUT FRAME 1

ORIGINAL PAGE IS
OF POOR QUALITY

FOLDOUT FRAME 2

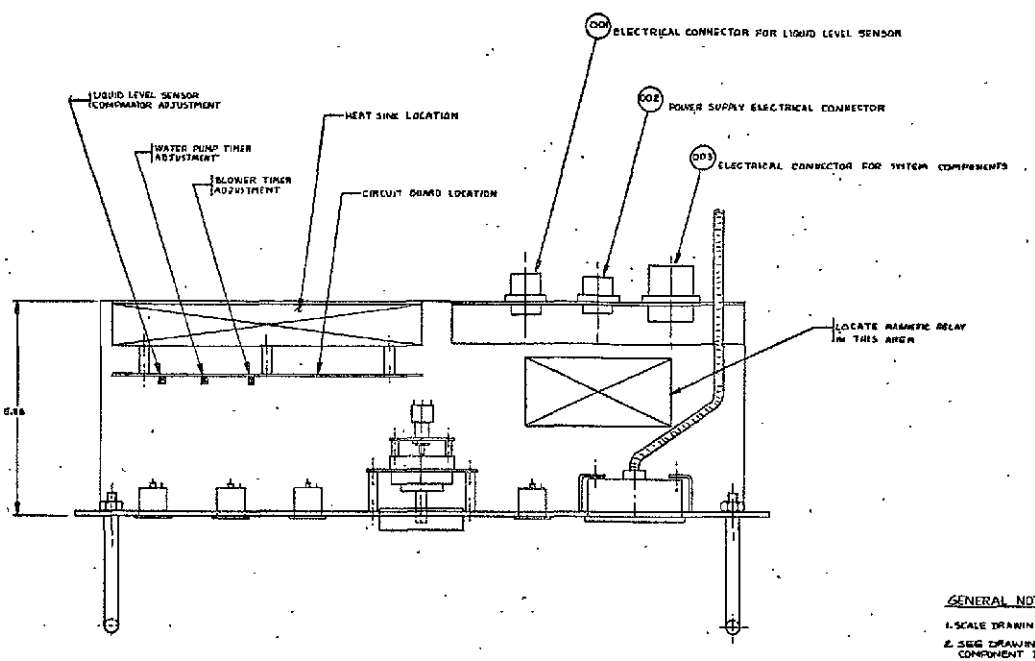


## GENERAL NOTES

1. SCALE DRAWING FOR GENERAL LOCATION OF HARDWARE DESCRIBED.
2. SEE DRAWING RES 3158200 FOR WIRING SCHEMATIC AND ELECTRONIC COMPONENT IDENTIFICATION
3. APPLY SWITCH AND INDICATOR FUNCTION NOMENCLATURE AS SHOWN.

## FLAGNOTES

1. AVAILABLE FROM BREADBOARD TEST UNIT OR MARTIN MARIETTA STOCK.

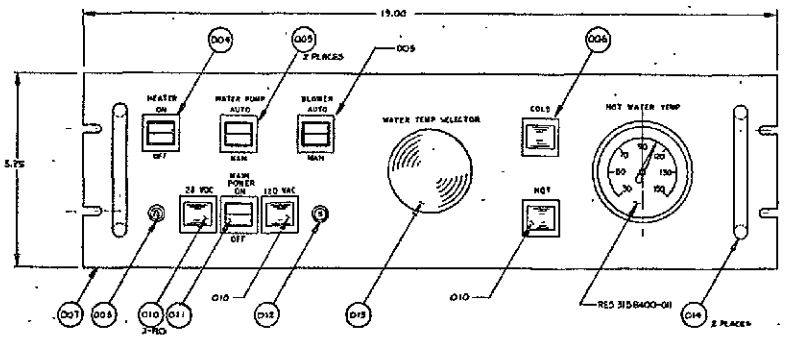


-009 ELECTRICAL CONTROL ASSEMBLY

| | | | | | | |
|---|---|---|---|---|---|---|
| | 1 | RES3158400-011 | THERMOMETER ASSY | MARSHALLTOWN # V-8 | | |
| | 2 | 014 | HEAD GRP | | | CHROME |
| | 1 | 013 | SWITCHING RHEOST | | | |
| | 1 | 012 | CIRCUIT BREAKER | | | 7½ AMP, 28 VDC |
| | 1 | 011 | ROCKER SWITCH | | | 2-POS, RED |
| | 3 | 010 | LIGHT | | | RED |
| | 1 | 009 | CIRCUIT BREAKER | | | 1 AMP, BROWN |
| | 1 | 008 | PANEL | | | SAND COLOR, SMP |
| | 1 | 006 | LIGHT | | | ORANGE |
| | 1 | 005 | ROCKER SWITCH | | | 3 POS, ORANGE |
| | 1 | 004 | ROCKER SWITCH | | | 2-POS, ORANGE |
| | 1 | 003 | ELEC CONNECTOR | | | |
| | 1 | 002 | ELEC CONNECTOR | | | |
| | 1 | 001 | TYE CONNECT BRD | | | |
| | 12 | 009 | ELEC CONTROL PNL ASSY BOX | | | |

LIST OF MATERIAL

T. FINNERTY 5-17-78

G.G. Rumsey 7-31-78

MARTIN MARIETTA CORPORATION

ELECTRICAL CONTROL BOX AND DISPLAY

E 04236 RES3158310

SCALE FULL 1 OF 1

FOLDOUT FRAME 1

FOLDOUT FRAME 2

ORIGINAL PAGE IS OF POOR QUALITY

ORIGINAL PAGE IS OF POOR QUALITY

| ASSY No. | DIM-A | DIM-B |
|---|---|---|
| 010 | 18 15/16 ± 1/16 | 27 15/16 ± 1/16 |
| 019 | 18 15/16 ± 1/16 | 21 15/16 ± 1/16 |
| 020 | 17 15/16 ± 1/16 | 15 3/16 ± 1/16 |

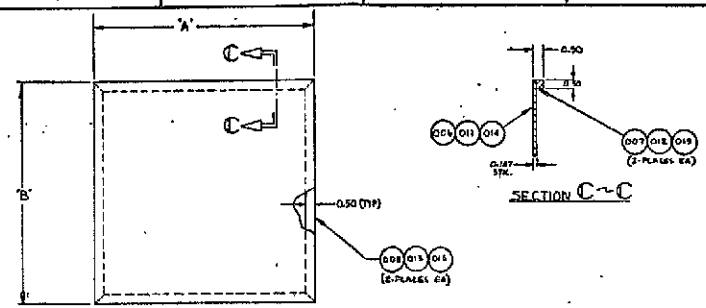


-010, -019, -020 PANEL ASSY

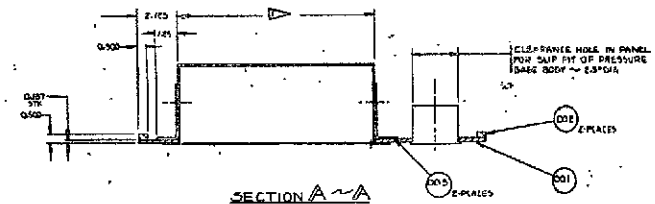


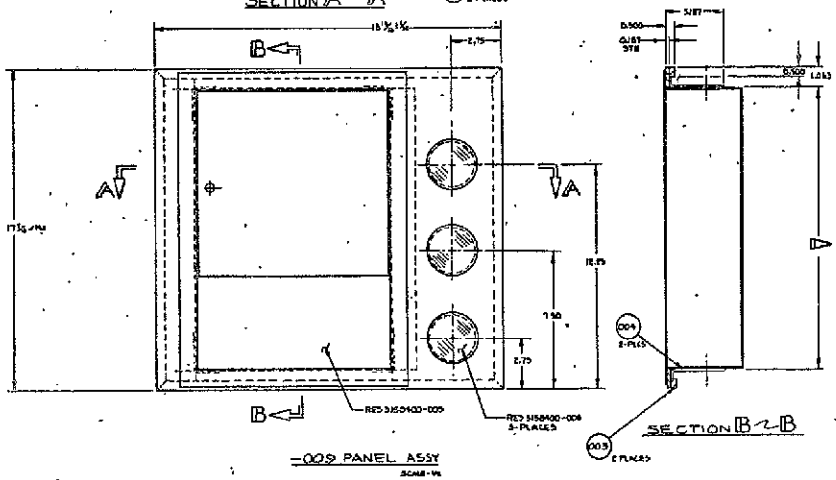


-009 PANEL ASSY

SPACING AND CUTOUT TO BE SLIP FIT WITH BOX SECTION OF TOWEL DISPENSER

| | | | | | | | | | | | | |
|---|---|---|---|---|---|---|---|---|---|---|---|---|
| | | | | 2 | RES 3158400-006 | PRESSURE BAKE | FILE CASE | MARSHALL TOWN | | | | |
| | | | | 1 | RES 3158400-005 | PAPER TOWEL QUEEN | MODEL 133 | AMERICAN DISPENSER COMPANY | | | | |
| | | 2 | | | 016 | FRAME STRIP | [illegible] | ABS PLASTIC, BLACK COLOR, TEXTURED SURFACE | | | | |
| | | 2 | | | 015 | FRAME STRIP | [illegible] | | | | | |
| | | | | | 014 | PANEL | [illegible] | | | | | |
| | | | 2 | | 013 | FRAME STRIP | [illegible] | | | | | |
| | | | 2 | | 012 | FRAME STRIP | [illegible] | | | | | |
| | | | 1 | | 011 | PANEL | [illegible] | | | | | |
| | | | | 2 | 008 | FRAME STRIP | [illegible] | | | | | |
| | | | | 2 | 007 | FRAME STRIP | [illegible] | | | | | |
| | | | | 1 | 006 | PANEL | [illegible] | | | | | |
| | | | | 2 | 005 | SUPPORT ANGLE | [illegible] | | | | | |
| | | | | 2 | 004 | SUPPORT ANGLE | [illegible] | | | | | |
| | | | | 2 | 003 | FRAME STRIP | [illegible] | | | | | |
| | | | | 2 | 002 | FRAME STRIP | [illegible] | | | | | |
| | | | | 1 | 001 | PANEL | [illegible] | ABS PLASTIC, BLACK COLOR, TEXTURED SURFACE | | | | |
| | | | | | 020 | PANEL ASSY | | | | | | |
| | | | | | 019 | PANEL ASSY | | | | | | |
| | | | | | 010 | PANEL ASSY | | | | | | |
| | | | | | 009 | PANEL ASSY | | | | | | |

F. TINSCHIRE 5/30/11

FRONT PANEL ASSEMBLYS

E CAGE 30 RES 3158311

NOTED

FOLDOUT FRAME 1

FOLDOUT FRAME 2

ORIGINAL PAGE IS OF POOR QUALITY

ORIGINAL PAGE IS OF POOR QUALITY

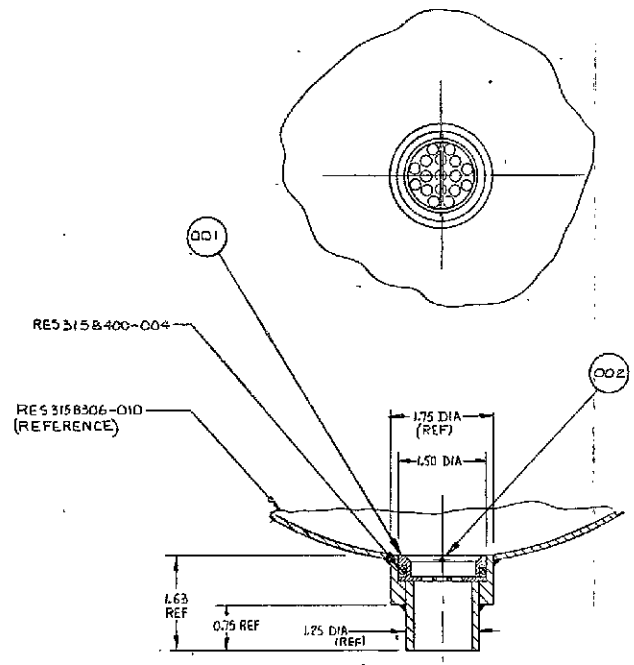


-009 GROSS FILTER INSTL

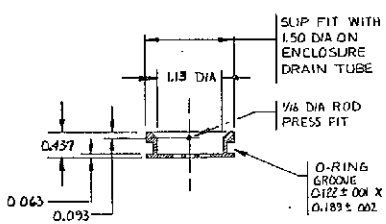


-001 FILTER

| QUANTITY/DASH NO. | PART NO. | ZONE | REV PTR | DESCRIPTION | STOCK SIZE | MATERIAL OR VENDOR | DRAW GRID | MATERIAL SPECIFICATION | REFERENCE OR NOTE GROUP | CODE |
|---|---|---|---|---|---|---|---|---|---|---|
| 1 | RES3158400-004 | | | O-RING | PARKER # 2-218 | BUNA-N | | | | |
| 1 | -002 | | | ROD | 1/16 RD X 2.0 LG | 304 CRES | | | | |
| 1 | -001 | | | FILTER | 5/8 X 2.0 X 2.0 | 304 CRES | | | | |
| 1 | -009 | | | FILTER INSTL | | | | | | |

LIST OF MATERIAL

INTERPRET DWG PER MIL-STD-100
UNLESS OTHERWISE SPECIFIED DIMENSIONS ARE IN INCHES AND ARE AFTER PLATING

TOLERANCES ON DECIMALS: FRACTIONS ± 1/32; .X ± .1; .XX ± .03; .XXX ± .005; ANGLES ± 30'

MACHINED SURFACES ✓

DRAWN: F. JONKONIEC 3-13-78

G. G. Rosone 5-2-78

MARTIN MARIETTA CORPORATION
MARTIN MARIETTA AEROSPACE, DENVER DIVISION, P.O. BOX 179, DENVER, COLORADO 80201

GROSS FILTER INSTALLATION

SIZE D | CODE IDENT NO. 04236 | RES3158312

SCALE FULL | SHEET 1 OF 1

RES3158312 SHT 1

ORIGINAL PAGE IS
OF POOR QUALITY



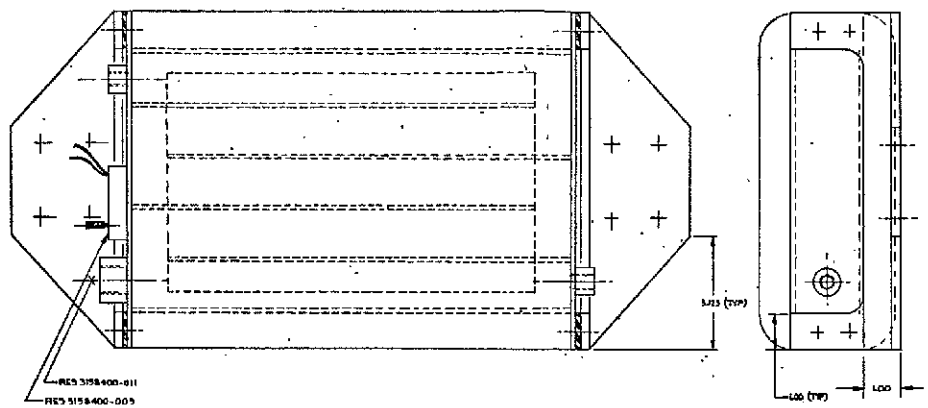


BOND HEATERS TO TANK WITH RES 3158400-010 ADHESIVE

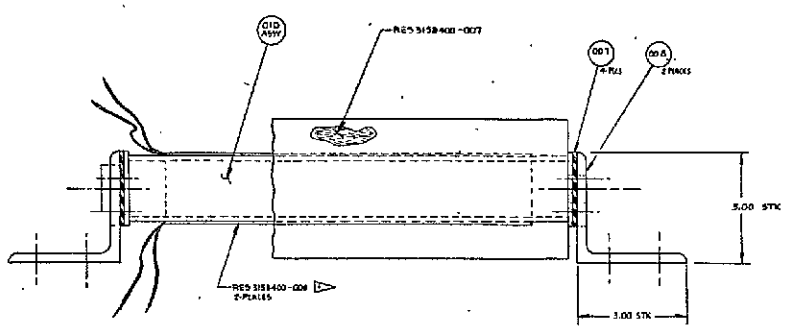


-009 HEATER ASSY

| | | | | | |
|---|---|---|---|---|---|
| 1 | RES 3158400-011 | THERMOSTAT ASSY | HONEYWELL TOUCH SWITCH # U-5 | | |
| 1 | RES 3158400-010 | ADHESIVE | RTV 116 SILICONE ADHESIVE | | |
| 1 | RES 3158400-009 | THERMOSTAT | MINIATURE HEATER 100 SURFACE MOUNTED BIMETALLIC TYPE | | |
| 2 | RES 3158400-008 | HEATER | WATLOW # CH20B1 | | |
| 1 | RES 3158400-007 | INSULATION | 1" DIA FIBERGLASS SAFE BLANKET | | |
| 2 | 008 | ANGLE BRACKET | 3 x 3 x 3 x 1/4 | 6061 T6 ALUM | |
| 14 | 007 | THERMAL INSULATION | 1 x 1 x 1/2 | ZIRCOR SAFE | |
| 2 | 006 | BOSS | 1.40 x 1.16 | 304 CRES | |
| 1 | 005 | BOSS | 1.40 x 1.16 | | |
| 1 | 004 | TOP/BOTTOM PLATE | 24 x 3.94 x 1/4 | | |
| 2 | 003 | SIDE PLATE | 24 x 2 x 1/8 | | |
| 4 | 002 | BINDER PLATE | 24 x 2 x 1/8 | | |
| 2 | 001 | END PLATE | 14 x 2 x 3/16 | 304 CRES | |
| 1 | 010 | TANK WELDMENT | | | |
| 1 | 009 | WATER HEATER ASM | | | |

| | | | |
|---|---|---|---|
| DRAWN | T. JENNINGS | 3-23-82 | WATER HEATER ASSEMBLY |
| | G.G. Reuss 5-27-82 | | |
| | | | E 04850 RES 3158313 |
| | | | SCALE FULL SHEET 1 OF 2 |

ORIGINAL PAGE IS
OF POOR QUALITY



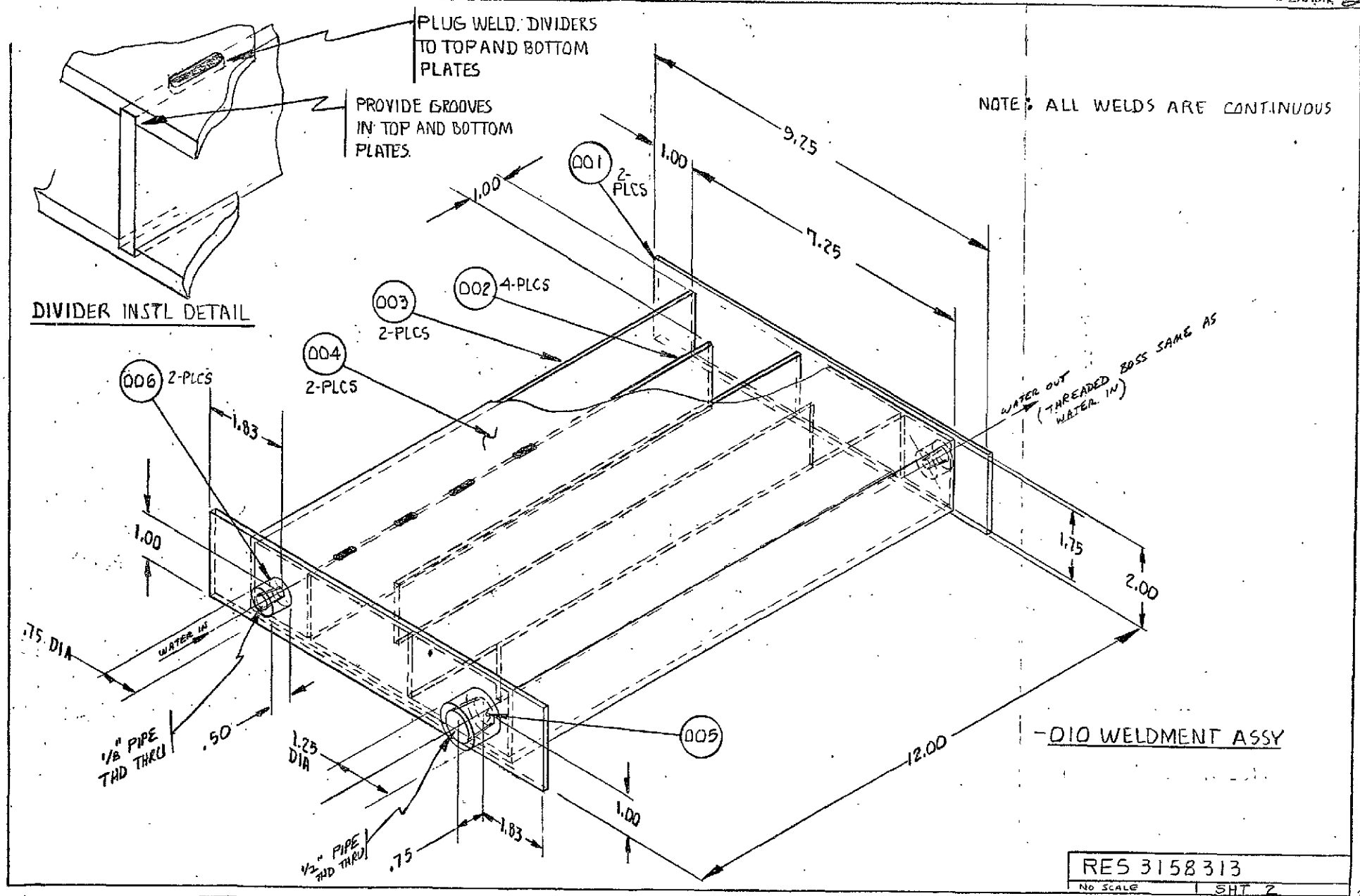

FOLDOUT FRAME 1

ORIGINAL PAGE IS OF POOR QUALITY

FOLDOUT FRAME 2

| REVISIONS | | | | |
|---|---|---|---|---|
| A | ES | REMOVED THE WHEE VALVE CALOUT RES3158408-017 AND RES3158400-005 SHOWING WATER LINE -006. | | |
| | | CHANGED LENGTH OF -006 FROM 45" TO 78". CHANGED QTY OF RES3158400-019 FROM 2 TO 1. CHANGED QTY OF RES3158400-015 FROM 15 TO 11. DELETED -007 LINE | | |

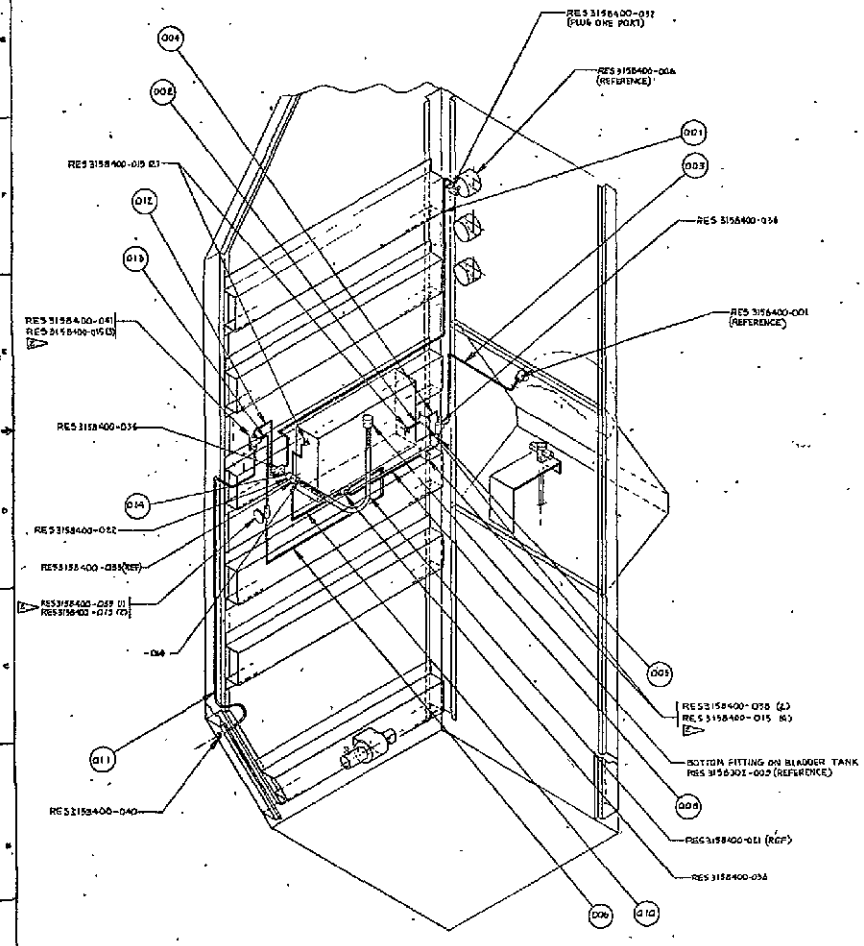


-005 POTABLE WATER LINE PLUMBING INSTL

PROVIDE ANGLE BRACKET FOR ATTACHMENT OF PANEL MOUNTED COMPONENTS

SCALE DRAWING TO APPROXIMATE TUBING BEND LOCATIONS AND ROUTING

| | | | | | | |
|---|---|---|---|---|---|---|
| | 1 | RES3158400-040 | 3 WAY BALL VALVE | [illegible] | | |
| | 11 | RES3158400-040 | BACKWARD FITTING | [illegible] | | |
| | 11 | RES3158400-037 | PLUGGING VALVE | [illegible] | | |
| | 12 | RES3158400-019 | SHUTOFF VALVE | [illegible] | | |
| | 1 | RES3158400-017 | TEE FITTING | [illegible] | | |
| | 3 | RES3158400-036 | 90° FITTING | [illegible] | | |
| | 1 | RES3158400-002 | 90 COMPRESSOR | [illegible] | | |
| | 11 | RES3158400-015 | WALL CONNECTOR | [illegible] | | |
| | 2 | 014 | TUBING | [illegible] | 304 CRES | |
| | 1 | 013 | TUBING | [illegible] | 304 CRES | |
| | 1 | 012 | TUBING | [illegible] | 304 CRES | |
| | 1 | 011 | TUBING | [illegible] | 304 CRES | |
| | 1 | 010 | TUBING | [illegible] | 304 CRES | |
| | 1 | 009 | TUBING | [illegible] | 304 CRES | |
| | 1 | 008 | TUBING | [illegible] | 304 CRES | |
| | 1 | 005 | TUBING | [illegible] | 304 CRES | |
| | 1 | 004 | TUBING | [illegible] | 304 CRES | |
| | 1 | 003 | TUBING | [illegible] | 304 CRES | |
| | 1 | 002 | TUBING | [illegible] | 304 CRES | |
| | 1 | 001 | TUBING | [illegible] | 304 CRES | |
| | 18 | | LINE INSTL | | | |

| | | | |
|---|---|---|---|
| | | | POTABLE WATER LINE PLUMBING INSTALLATION |
| | | | RES 3158314 |

FOLDOUT FRAME 1

ORIGINAL PAGE IS
OF POOR QUALITY

FOLDOUT FRAME 2

| | | | | |
|---|---|---|---|---|
| A | F/O L/R | ADDED RES 3158400-019 AND -016 | | |

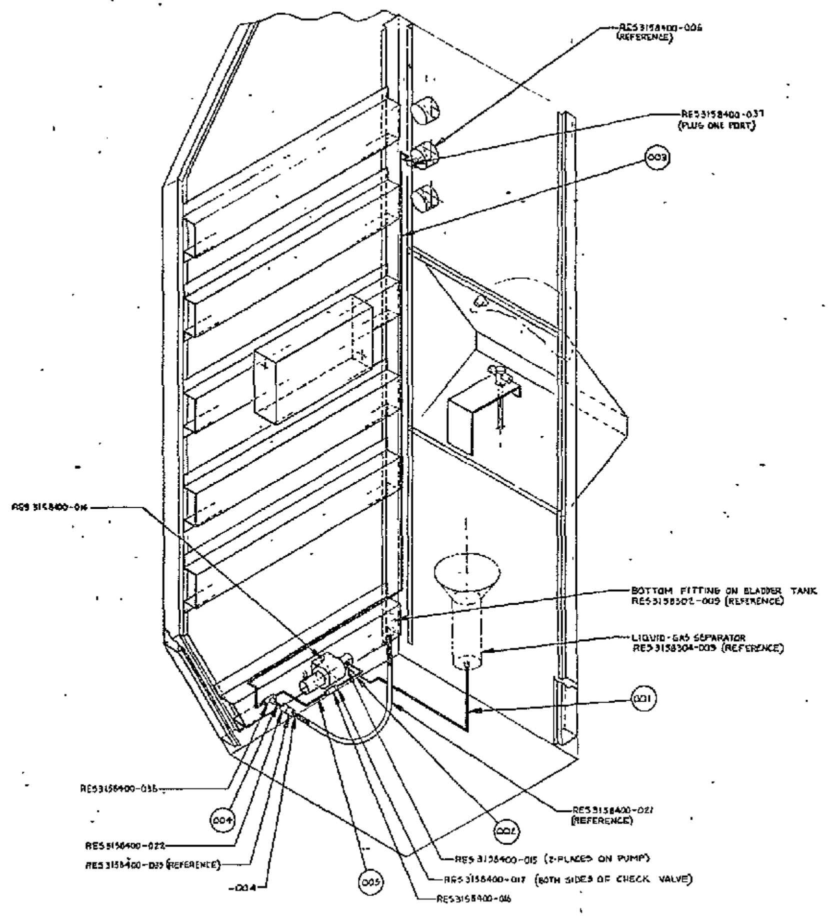


-009 WASTE WATER LINE PLUMBING INSTL

1 ▷ SCALE DRAWING TO APPROXIMATE TUBING BEND LOCATIONS AND ROUTING

| Qty | Part No. | Nomenclature | Specification | Material |
|---|---|---|---|---|
| 1 | RES 3158400-037 | FEMALE BRANCH TEE | SWAGELOK # SS-400-3-4-TTF | |
| 1 | RES 3158400-035 | TEE | SWAGELOK # SS-400-3 | |
| 1 | RES 3158400-022 | Q.D. COUPLING HALF | SWAGELOK # SS-QC4-B-400 | |
| 2 | RES 3158400-017 | FEMALE CONNECTOR | SWAGELOK # SS-400-7-2 | |
| 2 | RES 3158400-015 | MALE CONNECTOR | SWAGELOK # SS-400-1-2 | |
| 1 | RES 3158400-016 | CHECK VALVE | [illegible] | |
| 1 | RES 3158400-019 | WATER PUMP | MICRO PUMP # 12-[illegible] | |
| 1 | 005 | TUBING | [illegible] | 304 CRES |
| 2 | 004 | TUBING | [illegible] | 304 CRES |
| 1 | 003 | TUBING | [illegible] | 304 CRES |
| 1 | 002 | TUBING | [illegible] | 304 CRES |
| 1 | 001 | TUBING | [illegible] | 304 CRES |
| | 009 | LINE INSTL | | |

T. JANKOWIAK 4-21-76

G.G. Rosser 5-3-76

MARTIN MARIETTA CORPORATION

WASTE WATER LINE PLUMBING INSTALLATION

E 04236 RES3158315

SHEET 1 OF 1

FOLDOUT FRAME

ORIGINAL PAGE IS OF POOR QUALITY

FOLDOUT FRAME

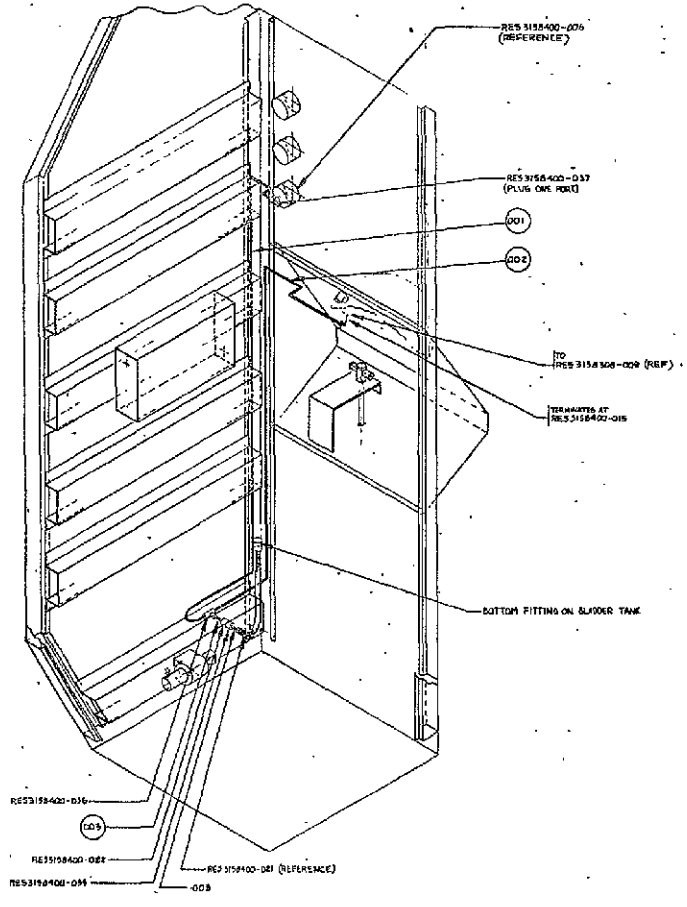


-009 SOAP LINE PLUMBING INSTL

SCALE DRAWING TO APPROXIMATE TUBING BEND LOCATIONS AND ROUTING

| | | | | | |
|---|---|---|---|---|---|
| 1 | RES 3158400 037 | FEMALE BRANCH TEE | SWAGELOK # SS-400-3-TTF | | |
| 1 | RES 3158400-034 | ELL | SWAGELOK # SS-400-3 | | |
| 1 | RES 3158400-033 | SOLID STEM VALVE | SWAGELOK # SS-4CM-10-400 | | |
| 1 | RES 3158400-022 | 90 DEGREE ELBOW | SWAGELOK # SS-400-9-400 | | |
| 1 | RES 3158400-015 | MALE CONNECTOR | SWAGELOK # SS-400-1-6 | | |
| 1 | 003 | TUBE | 0.400 x 0.035 WALL x 6 | 304 CRES | |
| 1 | 002 | TUBE | 0.400 x 0.035 WALL x 41 | 304 CRES | |
| 1 | 001 | TUBE | 0.400 x 0.035 WALL x 66 | 304 CRES | |
| 1 | 009 | END INSTL | | | |

FITTINGS 4-25-78

G. A. Rumsey 8-9-78

KAPTON MANUFACTURING CORPORATION

SOAP LINE PLUMBING INSTALLATION

E 04888 RES 3158316

SHEET 1 OF 1

FOLDOUT FRAME 1

ORIGINAL PAGE IS OF POOR QUALITY

FOLDOUT FRAME 2

| REVISIONS | | | | |
|---|---|---|---|---|
| SYM | ZONE | DESCRIPTION | DATE | APPROVED |
| A | | THIS DRAWING IS OUTDATED AND REPLACED BY REVISED RES 3158315 | CHG BY TGJ 7-7-78 | G.G. Rosner 7-20-78 |

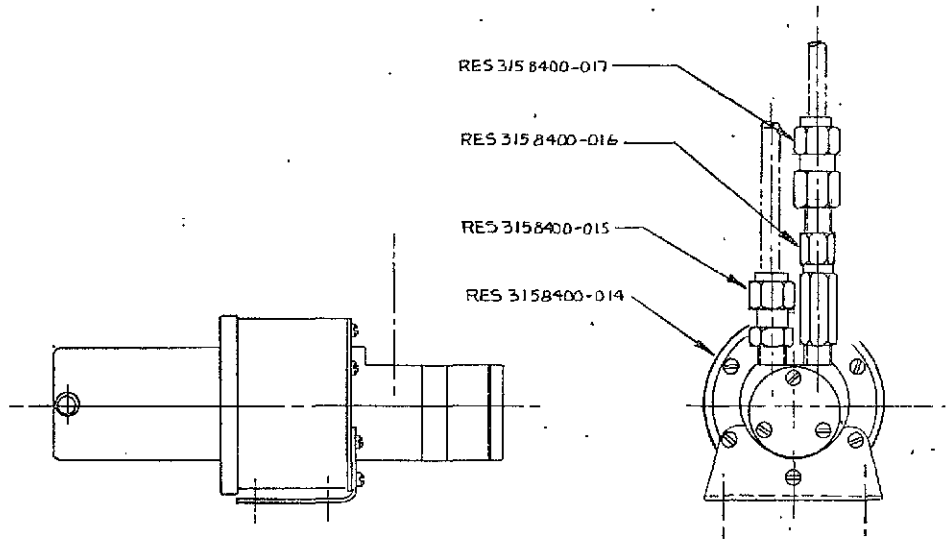


-009 PUMP ASSY

OBSOLETE SHEET

| QUANTITY/DASH NO. | PART NO. | ZONE | REV SYM | DESCRIPTION | STOCK SIZE | MATERIAL OR VENDOR | IMAGE CODE | MATERIAL SPECIFICATION | FINISH OR NPR CODE | CHG |
|---|---|---|---|---|---|---|---|---|---|---|
| 1 | RES 3158400-017 | | | FEMALE CONNECTOR | SWAGELOK # 400-7-2-316 | | | | | |
| 1 | RES 3158400-016 | | | CHECK VALVE | HOKE # 6133 M2S | | | | | |
| 1 | RES 3158400-015 | | | MALE CONNECTOR | SWAGELOK # SS-400-1-2 | | | | | |
| 1 | RES 3158400-014 | | | WATER PUMP | MICRO PUMP # 12-31-316 | | | | | |
| DP | 009 | | | PUMP ASSEMBLY | | | | | | |

009 DASH NO SHOWN . EVER DASH NO OPP

LIST OF MATERIAL

| EFFECTIVE ON | CALC WT | DASH NUMBER | NEXT ASSY | USED ON | FINAL ASSY | TEST |
|---|---|---|---|---|---|---|
| | | | APPLICATION | | QTY REQD | |

DIMENSIONING REF MIL-STD-8
UNLESS OTHERWISE SPECIFIED
DIMENSIONS ARE IN INCHES AND ARE AFTER PLATING
TOLERANCE ON:

| FRACTIONS | X | DECIMALS .XX | .XXX | ANGLES |
|---|---|---|---|---|
| ± 1/32 | ± .1 | ± .03 | ± .010 | ± 1/2° |

MACHINED SURFACES REF: MIL-STD-10

MIL-I-8500 STATUS
INTERCHANGEABLE
REPLACEABLE
UNCONTROLLED

DRAWN BY T. JONKONIEC DATE 3-22-78
CHECKED
STRESS ENGR
WT ENGR
MAT'L ENGR
RELIABILITY
QA ENGR
PROJECT G.G. Rosner 5-2-78
ENGR SPECIALTY

MARTIN MARIETTA CORPORATION
POST OFFICE BOX 179 DENVER COLORADO

WATER PUMP ASSEMBLY

SIZE C | CODE IDENT NO 04236 | RES 3158317

SCALE FULL | SHEET 1 OF 1

DEN 001500

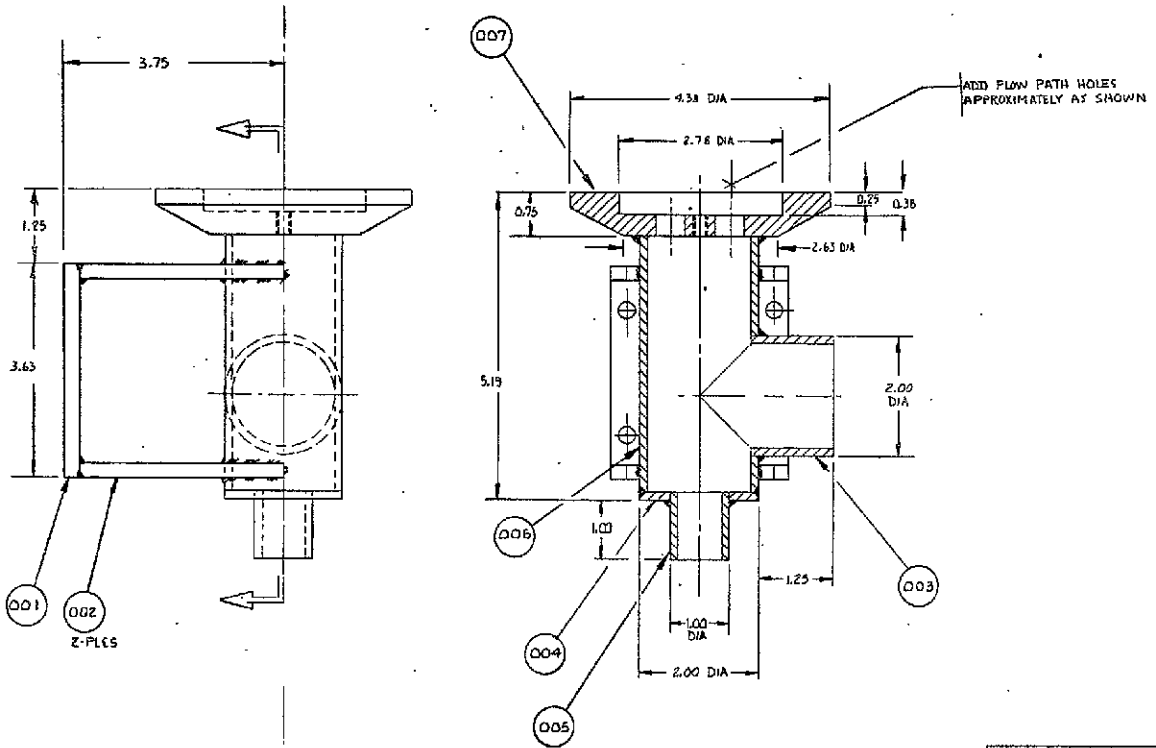


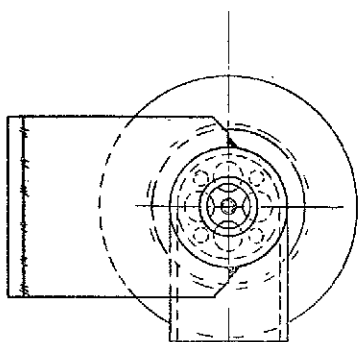

-009 WELDMENT ASSY

| QUANTITY/DASH NO. | PART NO. | SYM | REQ PER | DESCRIPTION | STOCK SIZE | MATERIAL OR VENDOR | REQD QUAN | MATERIAL SPECIFICATION | FINISH-CO APP CODE | QUAL |
|---|---|---|---|---|---|---|---|---|---|---|
| 1 | 007 | | | END PLATE | 3/4 x 5 x 5 | 6061-T6 ALUM | | | | |
| 1 | 006 | | | TUBE | 2 O.D. x 1 3/4 I.D. x 4 1/2 | | | | | |
| 1 | 005 | | | TUBE | 1" O.D. x 3/4 I.D. x 1 1/2 LG | | | | | |
| 1 | 004 | | | END PLATE | 1/8 x 2 1/2 x 2 1/2 | | | | | |
| 1 | 003 | | | TUBE | 2.0 O.D. x 1 3/4 I.D. x 3 | | | | | |
| 2 | 002 | | | PLATE | 1/4 x 3 1/2 x 4 | | | | | |
| 1 | 001 | | | PLATE | 1/4 x 3 1/2 x 4 | 6061-T6 ALUM | | | | |
| REF | 009 | | | WELDMENT ASSY | | | | | | |

LIST OF MATERIAL

INTERPRET DWG PER MIL-STD-100
UNLESS OTHERWISE SPECIFIED
DIMENSIONS ARE IN INCHES
AND ARE AFTER PLATING

TOLERANCES ON
FRACTIONS ± 1/32 | DECIMALS .X ± .1 .XX ± .03 .XXX ± .010 | ANGLES ± 1/2°

MACHINED SURFACES ✓

MIL T-9000 STATUS
INTERCHANGEABLE
PER ASSEMBLE
UNCONTROLLED

DRAWN BY T. JONKONIEL DATE 3-22-78
CHECKED
STRESS
WT STRESS
MATL SPEC
PROJECT
G.O. Rousseau 5-2-78
QUAL SPECIFY

MARTIN MARIETTA CORPORATION
MARTIN MARIETTA AEROSPACE, DENVER DIVISION P.O. BOX 179, DENVER, COLORADO 80201

TEE DUCT WELDMENT

SIZE D | CODE IDENT NO. 04236 | RES 3158318

SCALE FULL | SHEET 1 OF 1

APPROVED BY | CALC WT | MASS NUMBER | NEXT ASSY | USED ON | FINAL ASSY | TEST
APPLICATION | QTY REQD

FOLDOUT FRAME 1

ORIGINAL PAGE IS OF POOR QUALITY

FOLDOUT FRAME 2

| REVISIONS | | | | |
|---|---|---|---|---|
| SYM | ZONE | DESCRIPTION | DATE | APPROVED |

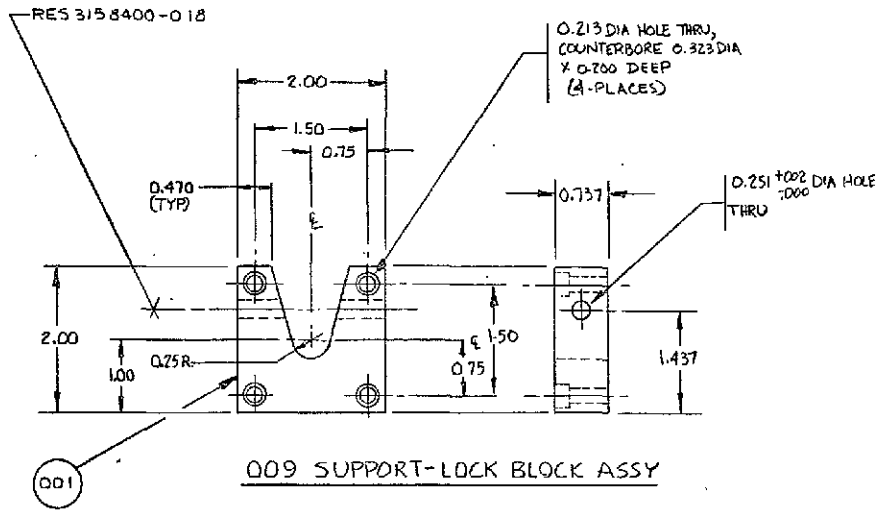


009 SUPPORT-LOCK BLOCK ASSY

| QUANTITY/DASH NO | | | | PART NO. | ZONE | REV SYM | DESCRIPTION | STOCK SIZE | MATERIAL OR VENDOR | REV ZONE | MATERIAL SPECIFICATION | FINISH OR MFR CODE | CHG |
|---|---|---|---|---|---|---|---|---|---|---|---|---|---|
| | | | 1 | RES 315 8400-018 | | | BALL-LOCK PIN | 1/4 DIA X 2" GRIP | | | | | |
| | | | 1 | 001 | | | BLOCK | 1 X 2 1/2 X 2 1/2 | 6061-T6 ALUM | | | IRIDITE | |
| | | | 009 | 009 | | | BLOCK ASSY | | | | | | |

000 DASH NO SHOWN — EVEN DASH NO OFF — LIST OF MATERIAL

| EFFECTIVE ON | CALC WT | DASH NUMBER | NEXT ASSY | USED ON | FINAL ASSY | TEST |
|---|---|---|---|---|---|---|
| | | | APPLICATION | | QTY REQD | |

DIMENSIONING REF MIL-STD-8 UNLESS OTHERWISE SPECIFIED
DIMENSIONS ARE IN INCHES AND ARE AFTER PLATING
TOLERANCES ON: FRACTIONS ± 1/64; DECIMALS .X ± .1, .XX ± .03, .XXX ± .010; ANGLES ± 1/2°
MACHINED SURFACES REF: - MIL-STD-10
MIL-1-8500 STATUS
INTERCHANGEABLE
REPLACEABLE ✓
UNCONTROLLED

DRAWN BY T. JONKONIEC DATE 3-23-78
CHECKED
SPECIFIC STAGE
MFG ENGR
DATE STAGE
MECHANICALITY
QA ENGR
PROJECT G.C. Rusmer 5-2-78
QUAL INFORMITY

MARTIN MARIETTA CORPORATION
POST OFFICE BOX 179 DENVER, COLORADO

SUPPORT-LOCK BLOCK ASSEMBLY

SIZE C | CODE IDENT NO. 04236 | RES 3158319
SCALE FULL | SHEET 1 OF 1

DEN 061000 (4-66)

FOLDOUT FRAME 1

ORIGINAL PAGE IS OF POOR QUALITY

FOLDOUT FRAME 2

| | | | | |
|---|---|---|---|---|
| A | F/D | ADDED DETAILS -008 AND -010 WITH ASSOCIATED WIRE ROUTING | EAL TSO 1-19-78 | |

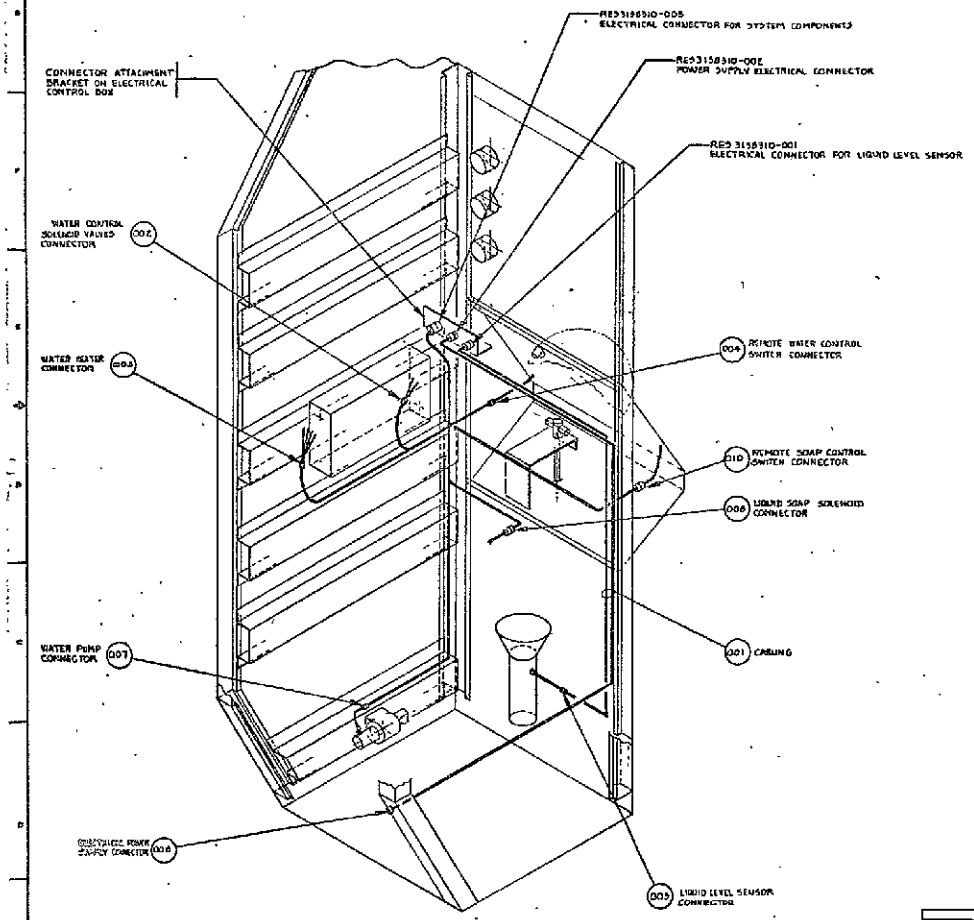


-009 ELECTRICAL CABLE ROUTING

GENERAL NOTES

1. SCALE DRAWING TO APPROXIMATE ELECTRICAL CABLE ROUTING.
2. SEE DRAWING RES 3158200 FOR WIRING SCHEMATIC AND ELECTRONIC COMPONENT IDENTIFICATION; SEE DRAWING RES3158310 FOR ELECTRICAL CONTROL BOX AND DISPLAY DESCRIPTION

FLAGNOTES

1 AVAILABLE FROM BREADBOARD TEST UNIT OR MARTIN MARIETTA STOCK

| | | | |
|---|---|---|---|
| 1 | 010 | REMOTE SWITCH CONNECTOR | 1 |
| 1 | 008 | LIQUID SOAP SOLENOID CONNECTOR | 1 |
| 1 | 007 | WATER PUMP CONNECTOR | |
| 1 | 006 | EXTERNAL POWER SUPPLY CONNECTOR | |
| 1 | 005 | LIQUID LEVEL SENSOR CONNECTOR | |
| 1 | 004 | REMOTE SWITCH CONNECTOR | |
| 1 | 003 | WATER HEATER CONNECTOR | |
| 1 | 002 | SOLENOID VALVE CONNECTOR | |
| 1 | 001 | ELECTRICAL CABLE | 1 |
| 1 | 009 | CABLE TABLE INDEX | |

| | | | |
|---|---|---|---|
| | | | ELECTRICAL CABLE ROUTING |
| | | | RES 3158320 |

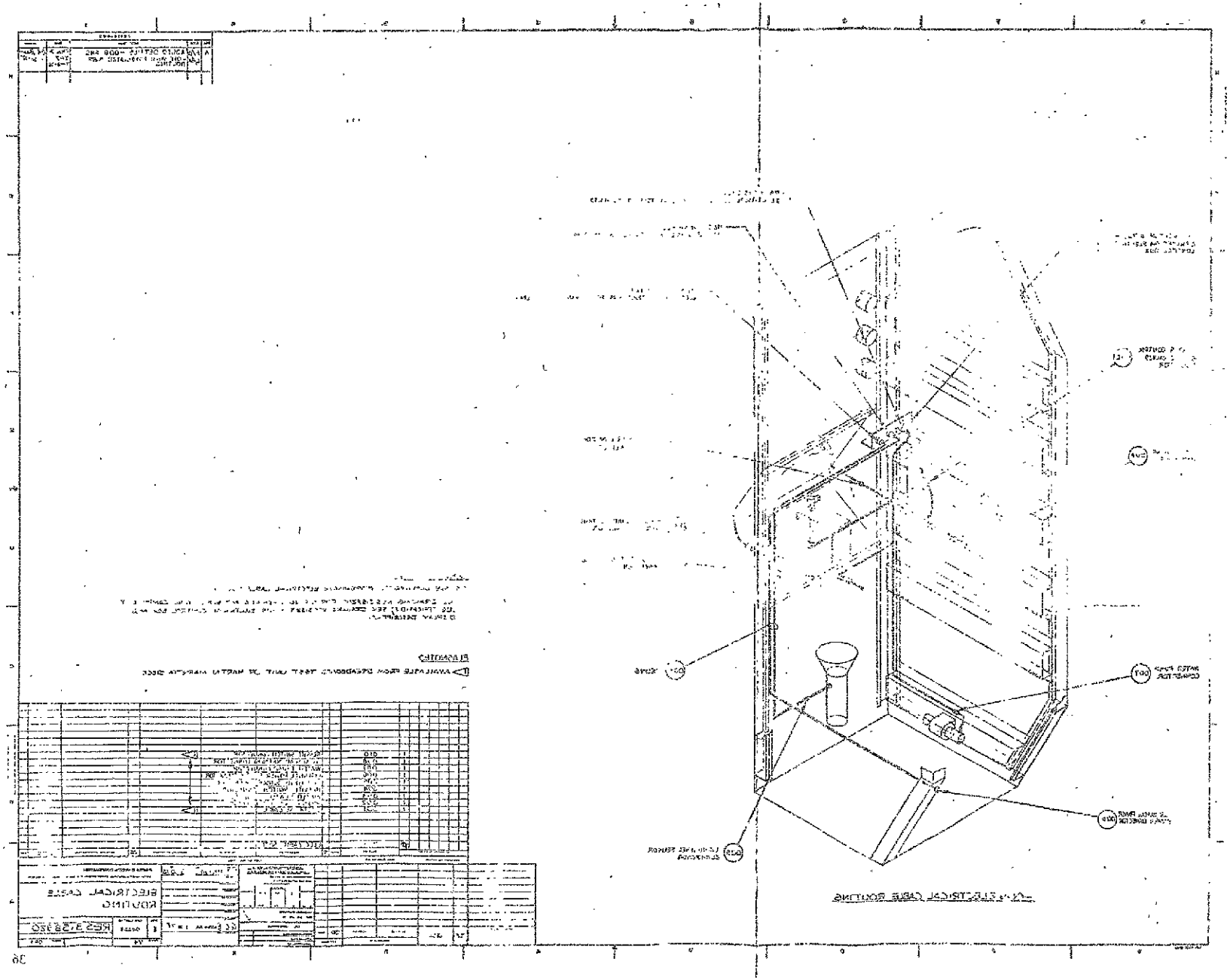

MFG CONTROL NO. _____

| MARTIN MARIETTA DASH NO. | AUTHORIZING NSR/A NO. | PART NO. (REF) | MFG CODE | NAME | ADDRESS |
|---|---|---|---|---|---|
| | | | | | |
| | | | | | |
| | | | | | |

DRAWING NO.

ORIGINAL PAGE IS OF POOR QUALITY

REVISIONS

ADDED: 042, 043, 044, 045, 046, 047, 048

DELETED: 026, 027, 028, 029, 031, 032, 030

| DRAWN BY | DEPT | DATE |
|---|---|---|
| T. JONKONIEC | | 5-3-78 |

CHECKING

GROUP ENGR

STRESS

WEIGHT

COMPONENTS APPL

CUSTOMER RPRSNTV

PROGRAM RPRSNTV G.C. Roederer 5-3-78

RELIABILITY

**MARTIN MARIETTA CORPORATION**
POST OFFICE BOX 179, DENVER, COLORADO

COMPONENT SPECIFICATIONS
SPACECRAFT UTENSIL/HAND CLEANSING FIXTURE

| SIZE | CODE IDENT NO. | |
|---|---|---|
| A | 04236 | RES3158400 |

SCALE | PAGE 37. | SHEET 1 OF

E-544D (1-68)

| Dwg. No. RES3158400 | Item | Page |
|---|---|---|
| -001 | Male Elbow Fitting | 39 |
| -002 | Spray Nozzle Adaptor | 40 |
| -003 | Spray Nozzle | 41 |
| -004 | O-Ring | 42 |
| -005 | Towel Dispenser | 43 |
| -006 | Pressure Gage | 44 |
| -007 | Heater Insulation | 45 |
| -008 | Heater | 46 |
| -009 | Thermostat | 47 |
| -010 | Adhesive | 48 |
| -011 | Thermometer Assembly | 49 |
| -012 | Blower | 50 |
| -013 | Charcoal Filter | 51 |
| -014 | Water Pump | 52 |
| -015 | Male Connector Fitting | 53 |
| -016 | Check Valve | 54 |
| -017 | Female Connector Fitting | 55 |
| -018 | Ball Lock Pin | 56 |
| -019 | Large Bladder Tank | 57 |
| -020 | Pipe Bushing | 58 |
| -021 | Flex Line | 59 |
| -022 | Quick Disconnect (coupling half) | 60 |
| -023 | Male Elbow Fitting | 61 |
| -024 | Small Bladder Tank | 62 |
| -025 | Pipe Reducer | 63 |
| -026 | Cable Assembly | 64 |
| -027 | Spring | 65 |
| -028 | O-Ring | 66 |
| -029 | O-Ring | 67 |
| -030 | Electric Switch | 68 |
| -031 | Spring | 69 |
| -032 | O-Ring | 70 |
| -033 | Metering Valve | 71 |
| -034 | Spacelab Rack | 72 |
| -035 | Quick Disconnect (stem half) | 73 |
| -036 | Tee Fitting | 74 |
| -037 | Tee Fitting | 75 |
| -038 | Solenoid Valve | 76 |
| -039 | Throttling Valve | 77 |
| -040 | Bulkhead Fitting | 78 |
| -041 | Three-way Valve | 79 |
| -042 | Pipe Coupling | 80 |
| -043 | Thermister Probe | 81 |
| -044 | Gear Rack | 82 |
| -045 | Spur Gear | 83 |
| -046 | Solenoid | 84 |
| -047 | Ball Valve | 85 |
| -048 | Tube Union Fitting | 86 |




PRECEDING PAGE BLANK NOT FILMED

SPACECRAFT UTENSIL/HAND CLEANSING FIXTURE DESIGN CONTROL SPECIFICATION SHEET

ITEM: (-001) MALE ELBOW FITTING

1. SCOPE: This specification describes the requirements for a male elbow fitting used in the fluid transfer subsystem.

2. FUNCTION: To provide a 90 degree change of direction to a fluid line.

3. DESCRIPTION: Reference Swagelok part no. SS-400-2-2.

4. MATERIALS: 316 stainless steel

5. PERFORMANCE: N/A

6. INTERFACES:

   6.1 Fluid: $3.2 \times 10^{-3}$m (1/8-inch) pipe thread, $6.4 \times 10^{-3}$m (1/4-inch) tube connection

7. ENVIRONMENT: Cabin ambient

8. DUTY CYCLE: N/A

9. ENVELOPE: Negligible

SPACECRAFT UTENSIL/HAND CLEANSING FIXTURE DESIGN CONTROL SPECIFICATION SHEET

ITEM: (-002) NOZZLE ADAPTOR

1. SCOPE: This specification describes the requirements for an adaptor piece used in the fluid transfer subsystem.

2. FUNCTION: To allow the adaptation of a nozzle with machine threads to a standard fluid system.

3. DESCRIPTION: Reference Spraying System Company "Unijet Body - 1335SS"

4. MATERIALS: 304 stainless steel

5. PERFORMANCE: N/A

6. INTERFACES:
   6.1 Fluid: $3.2 \times 10^{-3}$m (1/8-inch) pipe thread, $1.7 \times 10^{-2}$m (11/16-inch) nozzle thread
   6.2 Mechanical: Angle bracket

7. ENVIRONMENT: cabin ambient

8. DUTY CYCLE: N/A

9. ENVELOPE: Negligible

SPACECRAFT UTENSIL/HAND CLEANSING FIXTURE DESIGN CONTROL SPECIFICATION SHEET

ITEM: (-003) SPRAY NOZZLE

1. SCOPE: This specification describes the requirements for a water nozzle incorporated in the washing enclosure.

2. FUNCTION: To provide a water spray pattern to wet and rinse hands or utensils.

3. DESCRIPTION: Reference Spraing System Company part no. 5500-X8. Straight stream to full cone spray pattern.

4. MATERIALS: 304 stainless steel

5. PERFORMANCE:

5.1 Flow Rates:

| | |
|---|---|
| $6.1 \times 10^{-6} m^3/sec$ (.097 gpm) with $66^\circ$ cone | $1.4 \times 10^5 N/m^2$ (20 psi) |
| $2.1 \times 10^{-5} m^3/sec$ (.33 gpm) with straight stream | |
| $7.6 \times 10^{-6} m^3/sec$ (.12 gpm) with $71^\circ$ cone | $2.0 \times 10^5 N/m^2$ (30 psi) |
| $2.5 \times 10^{-6} m^3/sec$ (.40 gpm) with straight stream | |

6. INTERFACES:

6.1 Fluid: $1.7 \times 10^{-2}$ m (11/16-inch) machine thread

7. ENVIRONMENT: Cabin ambient

8. DUTY CYCLE: N/A

9. ENVELOPE: Negligible

SPACECRAFT UTENSIL/HAND CLEANSING FIXTURE DESIGN CONTROL SPECIFICATION SHEET

ITEM: (-004) O-RING

1. SCOPE: This specification describes the requirements for an O-ring in the drain of the washing enclosure.

2. FUNCTION: To provide a seal and a retention force between the gross filter assembly and the enclosure drain.

3. DESCRIPTION: Reference Parker part no. 2-218. Inside diameter is 0.031m (1.234 in) and cross section is $3.5 \times 10^{-3}$m (0.139 in)

4. MATERIALS: Buna-N

5. PERFORMANCE: N/A

6. INTERFACES:
   6.1 Mechanical: O-ring groove in gross filter assembly.

7. ENVIRONMENT: cabin ambient

8. DUTY CYCLE: N/A

9. ENVELOPE: Negligible

SPACECRAFT UTENSIL/HAND CLEANSING FIXTURE DESIGN CONTROL SPECIFICATION SHEET

ITEM: (-005) TOWEL DISPENSER

1. SCOPE: This specification describes the requirements for a towel dispenser to support the cleansing fixture operation.

2. FUNCTION: To provide towels for hand/utensil wiping.

3. DESCRIPTION: Reference American Dispenser Company model No. 171. Recessed towel dispenser and shelf.

4. MATERIALS: Type 18-8 stainless steel, 22 gauge, welded construction.

5. PERFORMANCE:

   5.1 Holding capacity: 200 C-fold or 400 multifold towels

6. INTERFACES:

   6.1 Mechanical: Flange mount

7. ENVIRONMENT: Cabin ambient

8. DUTY CYCLE: N/A

9. ENVELOPE: 0.32m (12.75 in.) wide x 0.44m (17.13 in.) high x 0.11m (4.25 in.) deep

SPACECRAFT UTENSIL/HAND CLEANSING FIXTURE DESIGN CONTROL SPECIFICATION SHEET

ITEM: (-006) PRESSURE GAGE

1. SCOPE: This specification describes the requirements for a pressure gage used on the cleansing fixture.

2. FUNCTION: To indicate pressure of water/soap subsystems which correlates to quantity of fluid remaining in tanks.

3. DESCRIPTION: Reference Marshalltown Fig. 23 KB, flush mounted with center back connection. 0.06m (2½") dial size

4. MATERIALS: Drawn steel case, phosphatized for rust resistance, black enamel finish. Brass socket.

5. PERFORMANCE:
   5.1 Range: $0-6.89 \times 10^5$ N/m$^2$ (0-100 psi)
   5.2 Figure Intervals: $1.38 \times 10^5$ N/m$^2$ (20 psi)
   5.3 Graduating Marks: $1.38 \times 10^4$ N/m$^2$ (2 psi)

6. INTERFACES:
   6.1 Mechanical: Flange/U-clamp
   6.2 Fluid: $6.4 \times 10^{-3}$m (1/4") pipe thd connection

7. ENVIRONMENT: Cabin ambient

8. DUTY CYCLE: N/A

9. ENVELOPE: $7.4 \times 10^{-2}$m (2.9" dia) x $4.6 \times 10^{-2}$m(1.8" long)

SPACECRAFT UTENSIL/HAND CLEANSING FIXTURE DESIGN CONTROL SPECIFICATION SHEET

ITEM: (-007) INSULATION

1. SCOPE: This specification describes the requirements for insulation utilized on the hot water holding tank.

2. FUNCTION: To minimize heat loss from hot water holding tank.

3. DESCRIPTION: Reference McMaster part no. 9356K11

4. MATERIALS: Fiberglass blanket

5. PERFORMANCE:
   5.1 Thermal Conductivity: Less than 0.25 BTU per hour per sq/ ft. per $1^{o}F$ at $75^{o}$ mean temperature.
   5.2 Density: 1.14 kg (2½ lbs) per cubic foot
6. INTERFACES:
   Mechanical: Taped to hot water tank

7. ENVIRONMENT: Cabin ambient

8. DUTY CYCLE: N/A

9. ENVELOPE: $2.5 \times 10^{-2}$m (1") thk x 0.6m (2 ft) x 1.2m (4 ft)

SPACECRAFT UTENSIL/HAND CLEANSING FIXTURE DESIGN CONTROL SPECIFICATION SHEET

ITEM: (-008) HEATER

1. SCOPE: This specification describes the requirements for heaters utilized on the hot water holding tank.

2. FUNCTION: To raise temperature of water from ambient to a range of 313.7 - 319.3°K (105 - 115°F)

3. DESCRIPTION: Reference Watlow part no. D60100C1 rubber heater

4. MATERIALS: Silicone rubber, 0.2m (8") teflon insulated lead wires

5. PERFORMANCE:

   5.1 Power supply required: 120 VAC
   5.2 Watt/Density: 5 watts per square inch

6. INTERFACES: Bonded to hot water tank

7. ENVIRONMENT: Cabin ambient

8. DUTY CYCLE: N/A

9. ENVELOPE: $1.4 \times 10^{-3}$m (.055") thk x 0.15m (6") x 0.25m (10")

SPACECRAFT UTENSIL/HAND CLEANSING FIXTURE DESIGN CONTROL SPECIFICATION SHEET

ITEM: (-009) THERMOSTAT

1. SCOPE: This specification describes the requirements for a thermostat utilized on the hot water holding tank.

2. FUNCTION: To maintain water temperature in a range of 313.7-319.3°K (105-115°F)

3. DESCRIPTION: Reference Minnetronics part no. RG-100, Adjustable Thermostat

4. MATERIALS: TBD

5. PERFORMANCE:
   5.1 Type: Bimetallic, adjustable
   5.2 Range: 283.2-422°K (50-300°F)
   5.3 Sensitivity: ±2.8°K (±5°F)

6. INTERFACES: Bonded to hot water tank

7. ENVIRONMENT: Cabin ambient

8. DUTY CYCLE: N/A

9. ENVELOPE: Negligible

SPACECRAFT UTENSIL/HAND CLEANSING FIXTURE DESIGN CONTROL SPECIFICATION SHEET

ITEM: (-010) ADHESIVE

1. SCOPE: This specification describes the requirements for an adhesive utilized on the hot water holding tank.

2. FUNCTION: To bond silicone rubber heaters to stainless steel tank.

3. DESCRIPTION: Reference G.E. RTV-116

4. MATERIALS: TBD

5. PERFORMANCE: TBD

6. INTERFACES: Applied between rubber heaters and stainless steel hot water holding tank.

7. ENVIRONMENT: Cabin ambient

8. DUTY CYCLE: N/A

9. ENVELOPE: N/A

SPACECRAFT UTENSIL/HAND CLEANSING FIXTURE DESIGN CONTROL SPECIFICATION SHEET

ITEM: (-011) THERMOMETER

1. SCOPE: This specification describes the requirements for a thermometer used on the hot water subsystem.

2. FUNCTION: To monitor temperature in the hot water holding tank.

3. DESCRIPTION: Reference Marshalltown model V-8 flush mounted unit, 0.06m (2.5 in.) dial.

4. MATERIALS: Chrome plated drawn brass

5. PERFORMANCE:

   5.1 Type: Vapor tension capillary tube
   5.2 Range: 272-338.7°K (30-150°F)

6. INTERFACES:

   6.1 Mechanical: Flange/U-clamp, capillary tube with $1.3 \times 10^{3}$m (1/2") pipe thread probe

7. ENVIRONMENT: Cabin ambient

8. DUTY CYCLE: N/A

9. ENVELOPE: Approx. $7.6 \times 10^{-2}$m (3") dia x $5.1 \times 10^{-2}$m (2") long

SPACECRAFT UTENSIL/HAND CLEANSING FIXTURE DESIGN CONTROL SPECIFICATION SHEET

ITEM: (-012) BLOWER

1. SCOPE: This specification describes the requirements for a blower used in the air distribution subsystem.

2. FUNCTION: To draw air through the washing enclosure and drag water droplets to the liquid-gas separator.

3. DESCRIPTION: Reference TRW part no. 19A1771 vaneaxial blower

4. MATERIALS: Housing and impeller die cast aluminum, black anodized

5. PERFORMANCE:
   5.1 Air Flow: $1.75 \times 10^{-2}$ $m^3$/sec (37-cfm) @ 249 $N/m^2$ (1.5" $H_2O$)
   5.2 Voltage: 26 VDC
   5.3 Weight: 0.14 Kg (5 ounces)

6. INTERFACES:
   6.1 Mechanical: Flange/bolts
   6.2 Electrical: Two solder terminals
   6.3 Air Duct: 0.05m (2") dia housing

7. ENVIRONMENT: Cabin ambient

8. DUTY CYCLE: Constant duty life at 16,500 RPM exceeds 1,000 hours

9. ENVELOPE: 0.07m (2-3/4") dia x 0.06m (2-3/16") long

SPACECRAFT UTENSIL/HAND CLEANSING FIXTURE DESIGN CONTROL SPECIFICATION SHEET

ITEM: (-013) CHARCOAL FILTER

1. SCOPE: This specification describes the requirements for a charcoal filter used in the air distribution subsystem.

2. FUNCTION: To remove odors and vapors from air circulated in the cabin from the cleansing fixture.

3. DESCRIPTION: Reference Barneby-Cheney part no. CNB/VG cylindrical absorber cell

4. MATERIALS: 304 stainless steel canister

5. PERFORMANCE:
   Type of Charcoal: VG activated carbon
   Qty of Charcoal: 0.68Kg (1.5 pounds)
   Nominal Air Flow: $1.2 \times 10^{-2} m^3/sec$ (25 cfm)
   Pressure Drop @ Nom. Air Flow: 37.3 $N/m^2$ (0.15" $H_2O$)
6. INTERFACES:
   Mechanical: End rim on canister

7. ENVIRONMENT: Cabin ambient

8. DUTY CYCLE: N/A

9. ENVELOPE: 0.11m (4-3/8") dia x 0.28m (11") long

SPACECRAFT UTENSIL/HAND CLEANSING FIXTURE DESIGN CONTROL SPECIFICATION SHEET

ITEM: (-014) WATER PUMP

1. SCOPE: This specification describes the requirements for a water pump used in the waste water processing subsystem.

2. FUNCTION: To transfer water from separator sump to holding tank.

3. DESCRIPTION: Reference Micro-Pump part no. 12-31-316 gear pump

4. MATERIALS: 316 stainless steel pump with teflon gears

5. PERFORMANCE:
   5.1 Power required: 28 VDC
   Flow capabilities: $6.3 \times 10^{-5} m^3/sec$ (60 GPH) @ $0\text{-}N/m^2$ (0-psi)
   $2.6 \times 10^{-5} m^3/sec$ (25 GPH) @ $2.4 \times 10^5 N/m^2$ (35 psi)
   $0\text{-}m^3/sec$ (0-GPH) @ $4.1 \times 10^5 N/m^2$ (60 psi)

6. INTERFACES:

   Mechanical: Base/bolts
   Fluid: $3.2 \times 10^{-3} m$ (1/8") pipe thread ports

7. ENVIRONMENT: Cabin ambient

8. DUTY CYCLE: N/A

9. ENVELOPE: 0.06m (2.5") x 0.06m (2.5") x 0.16m (6.2")

SPACECRAFT UTENSIL/HAND CLEANSING FIXTURE DESIGN CONTROL SPECIFICATION SHEET

ITEM: (-015) MALE CONNECTOR FITTING

1. SCOPE: This specification describes the requirements for a male connector fitting used in the fluid transfer subsystem.

2. FUNCTION: To link a $3.2 \times 10^{-3}$m (1/8") f.p.t. port to a $6.4 \times 10^{-3}$m (1/4") diameter tubing line

3. DESCRIPTION: Reference Swagelok part no. SS-400-1-2

4. MATERIALS: 316 stainless steel

5. PERFORMANCE: N/A

6. INTERFACES:

   6.1 Fluid: $3.2 \times 10^{-3}$m (1/8") pipe thd x $6.4 \times 10^{-3}$m (1/4") tube connection

7. ENVIRONMENT: Cabin ambient

8. DUTY CYCLE: N/A

9. ENVELOPE: Negligible

SPACECRAFT UTENSIL/HAND CLEANSING FIXTURE DESIGN CONTROL SPECIFICATION SHEET

ITEM: (-016) CHECK VALVE

1. SCOPE: This specification describes the requirements for a check valve used in the fluid transfer subsystem.

2. FUNCTION: To prevent back flow of waste water through the pump and liquid-gas separator.

3. DESCRIPTION: Reference Hoke part no. 6133 M2S ball check valve

4. MATERIALS: 303 stainless steel

5. PERFORMANCE:
   Cracking Pressure: $1.38 \times 10^4$ N/m$^2$ (2 psi)
   Maximum operating pressure: $4.13 \times 10^7$ N/m$^2$ (6000 psi)
   Maximum operating temperature: 366.5°K (200°F)

6. INTERFACES:
   6.1 Fluid: $3.2 \times 10^{-3}$m (1/8") male pipe thds.

7. ENVIRONMENT: Cabin ambient

8. DUTY CYCLE: N/A

9. ENVELOPE: $1.9 \times 10^{-2}$m (3/4") x $1.9 \times 10^{-2}$m (3/4") x $6.0 \times 10^{-2}$m (2-3/8")

SPACECRAFT UTENSIL/HAND CLEANSING FIXTURE DESIGN CONTROL SPECIFICATION SHEET

ITEM: (-017) FEMALE CONNECTOR FITTING

1. SCOPE: This specification describes the requirements for a female connector fitting used in the fluid transfer subsystem.

2. FUNCTION: To provide a link between a male $3.2 \times 10^{-3}$m (1/8") pipe thd and a $6.4 \times 10^{-3}$m (1/4") tube

3. DESCRIPTION: Reference Swagelok part no. SS-400-7-2

4. MATERIALS: 316 stainless steel

5. PERFORMANCE: N/A

6. INTERFACES:
   6.1 Fluid: $3.2 \times 10^{-3}$m (1/8") pipe thd, $6.4 \times 10^{-3}$m (1/4") tube connection

7. ENVIRONMENT: Cabin ambient

8. DUTY CYCLE: N/A

9. ENVELOPE: Negligible

SPACECRAFT UTENSIL/HAND CLEANSING FIXTURE DESIGN CONTROL SPECIFICATION SHEET

ITEM: (-018) BALL LOCK PINS

1. SCOPE: This specification describes the requirements for a ball-lock-pin used on the cleansing fixture.

2. FUNCTION: To retain bladder tank assemblies in their locating blocks.

3. DESCRIPTION: Reference Hartwell part no. LW4C-T-2,000 T-handle pin

4. MATERIALS: Corrosion resistant steel

5. PERFORMANCE:

   5.1 Grip length: 0.05m (2 inches)
   5.2 Double shear: 4182 kg (9200 lbs)

6. INTERFACES:

   6.1 Mechanical: slip fit with V-block supports

7. ENVIRONMENT: Cabin ambient

8. DUTY CYCLE: N/A

9. ENVELOPE: $1.3 \times 10^{-2}$m (1/2") x $5.1 \times 10^{-2}$m (2") x $8.9 \times 10^{-2}$m (3-1/2")

SPACECRAFT UTENSIL/HAND CLEANSING FIXTURE DESIGN CONTROL SPECIFICATION SHEET

ITEM: (-019) LARGE BLADDER TANK

1. SCOPE: This specification describes the requirements for a large bladder tank used in the cleansing fixture.

2. FUNCTION: To provide means of storing potable and waste water used in the cleansing fixture.

3. DESCRIPTION: Reference Well-x-Trol part no. WX-200 bladder tank

4. MATERIALS: Welded steel tank; butyl rubber diaphragm, polypropylene liner

5. PERFORMANCE:
   5.1 Maximum capacity: $4.35 \times 10^{-2} m^3$ (11.5 gallons)
   5.2 Drawdown: $2.6 \times 10^{-2} m^3$ (7-gal) in $1.38 \times 10^{5}$-$4.5 \times 10^{5}$ $N/m^2$ (20-65 psi) range
   5.3 Maximum operating pressure: $6.9 \times 10^{5}$ $N/m^2$ (100 psi)

6. INTERFACES:
   6.1 Mechanical: Attachment rings
   6.2 Fluid: $2.54 \times 10^{-2}$ m (1") pipe coupling

7. ENVIRONMENT: Cabin ambient

8. DUTY CYCLE: N/A

9. ENVELOPE: 0.39m (15-3/8") diameter x 0.56m (22") long

SPACECRAFT UTENSIL/HAND CLEANSING FIXTURE DESIGN CONTROL SPECIFICATION SHEET

ITEM: (-020) PIPE BUSHING

1. SCOPE: This specification describes the requirements for a pipe bushing used in the fluid subsystem.

2. FUNCTION: To provide a link between tank $2.54 \times 10^{-2}$m (1") coupling and $6.4 \times 10^{-3}$m (1/4") pipe thread.

3. DESCRIPTION: Reference Cajon part no. SS-16-RB-4 reducing bushing.

4. MATERIALS: 316 stainless steel

5. PERFORMANCE: N/A

6. INTERFACES:

   6.1 Fluid: $2.54 \times 10^{-2}$m (1") pipe thd x $6.4 \times 10^{-3}$m (1/4") pipe thd

7. ENVIRONMENT: Cabin ambient

8. DUTY CYCLE: N/A

9. ENVELOPE: Negligible

SPACECRAFT UTENSIL/HAND CLEANSING FIXTURE DESIGN CONTROL SPECIFICATION SHEET

ITEM: (-021) FLEXLINE

1. SCOPE: This specification describes the requirements for a flexline used on the fluid system.

2. FUNCTION: To facilitate the isolation of bladder tanks by providing motion to break disconnects.

3. DESCRIPTION: Reference Swagelok part no. SS-440-1-4-S4.

4. MATERIALS: 316 stainless steel

5. PERFORMANCE:
   5.1 Length: 0.3m (12 inches)
   5.2 Working pressure: $1x10^7$ $N/m^2$ (2660 psi)

6. INTERFACES:
   6.1 Fluid: $6.4x10^{-3}$m (1/4") pipe thd, $6.4x10^{-3}$m (1/4") tube coupling

7. ENVIRONMENT: Cabin ambient

8. DUTY CYCLE: N/A

9. ENVELOPE: $1.3x10^{-2}$m (1/2") dia x 0.3m (12") long

SPACECRAFT UTENSIL/HAND CLEANSING FIXTURE DESIGN CONTROL SPECIFICATION SHEET

ITEM: (-022) QUICK DISCONNECT, COUPLING HALF

1. SCOPE: This specification describes the requirements for a disconnect on the fluid subsystem.

2. FUNCTION: To facilitate the isolation of bladder tanks from the remaining system.

3. DESCRIPTION: Reference Swagelok part no. SS-QC4-B-400 Self sealing disconnect

4. MATERIALS: 316 stainless steel

5. PERFORMANCE:

   5.1 Operating technique: Push-pull type with collar
   5.2 Sealing: Self sealing when disconnected

6. INTERFACES:

   6.1 Fluid: $6.4 \times 10^{-3}$m (1/4") tube union

7. ENVIRONMENT: Cabin ambient

8. DUTY CYCLE: N/A

9. ENVELOPE: $1.6 \times 10^{-3}$m (5/8") dia x $5.1 \times 10^{-2}$ (2") long

C-2

SPACECRAFT UTENSIL/HAND CLEANSING FIXTURE DESIGN CONTROL SPECIFICATION SHEET

ITEM: (-023) MALE ELBOW FITTING

1. SCOPE: This specification describes the requirements for a male elbow fitting used in the fluid transfer subsystem.

2. FUNCTION: To provide a $90^{o}$ change of direction and link a $6.4x10^{-3}m$ (1/4") f.p.t. port to a $6.4x10^{-3}m$ (1/4") diameter tubing line

3. DESCRIPTION: Reference Swagelok part no. SS-400-2-4

4. MATERIALS: 316 stainless steel

5. PERFORMANCE: N/A

6. INTERFACES:
   6.1 Fluid: $6.4x10^{-3}m$ (1/4") pipe thd, $6.4x10^{-3}m$ (1/4") tube connection

7. ENVIRONMENT: Cabin ambient

8. DUTY CYCLE: N/A

9. ENVELOPE: Negligible

SPACECRAFT UTENSIL/HAND CLEANSING FIXTURE DESIGN CONTROL SPECIFICATION SHEET

ITEM: (-024) SMALL BLADDER TANK

1. SCOPE: This specification describes the requirements for a small bladder tank used in the cleansing fixture.

2. FUNCTION: To provide means of storing liquid soap used in the cleansing fixture.

3. DESCRIPTION: Reference Well-X-Trol part no. WX-101 bladder tank

4. MATERIALS: Welded steel tank, butyl rubber diaphragm, polypropylene liner

5. PERFORMANCE:
   5.1 Maximum capacity: $3.8 \times 10^{-3}$m (1-gallon)
   5.2 Drawdown: $3 \times 10^{-3}$m (0.8 gal.) in $1.38 \times 10^{-5}$-$3.4 \times 10^{5}$ N/m$^2$ (20-50 psi)
   5.3 Maximum operating pressure: $6.8 \times 10^{5}$ N/m$^2$ (100 psi)

6. INTERFACES:
   6.1 Mechanical: clamp supports on outer shell
   6.2 Fluid: $1.9 \times 10^{-2}$m (3/4") male pipe thd port

7. ENVIRONMENT: Cabin ambient

8. DUTY CYCLE: N/A

9. ENVELOPE: 0.2m (8") dia x 0.32m (12-5/8") long

SPACECRAFT UTENSIL/HAND CLEANSING FIXTURE DESIGN CONTROL SPECIFICATION SHEET

ITEM: (-Q25) PIPE REDUCER

1. SCOPE: This specification describes the requirements for a pipe reducer used in the fluid subsystem.

2. FUNCTION: To provide a link between $1.9 \times 10^{-2}$m (3/4") pipe thd tank port and $6.4 \times 10^{-3}$m (1/4") pipe thd.

3. DESCRIPTION: Reference Cajon part no. SS-12-HRCG-4 pipe reducer

4. MATERIALS: 316 stainless steel

5. PERFORMANCE: N/A

6. INTERFACES:
   6.1 Fluid: $1.9 \times 10^{-2}$m (3/4") pipe thd, $6.4 \times 10^{-3}$m (1/4") pipe thd.

7. ENVIRONMENT: Cabin ambient

8. DUTY CYCLE: N/A

9. ENVELOPE: Negligible

SPACECRAFT UTENSIL/HAND CLEANSING FIXTURE DESIGN CONTROL SPECIFICATION SHEET

ITEM: (-026) CABLE ASSEMBLY

1. SCOPE: This specification describes the requirements for a cable assembly used in the soap dispenser.

2. FUNCTION: Provides a link between leg actuator and dispenser poppet

3. DESCRIPTION: Wire cable within outer shield. Commercial bicycle brake cable assembly.

4. MATERIALS: TBD

5. PERFORMANCE: TBD

6. INTERFACES:

   6.1 Mechanical: Pivot rod actuator, soap dispenser poppet

7. ENVIRONMENT: Cabin ambient

8. DUTY CYCLE: N/A

9. ENVELOPE: Negligible

SPACECRAFT UTENSIL/HAND CLEANSING FIXTURE DESIGN CONTROL SPECIFICATION SHEET

ITEM: (-027) SPRING

1. SCOPE: This specification describes the requirements for a spring used in the soap dispenser.

2. FUNCTION: To provide sealing force on soap dispenser poppet.

3. DESCRIPTION: Reference Lee Spring part no. LC-04Se-18

4. MATERIALS: Stainless steel

5. PERFORMANCE:
   5.1 Outside diameter: $9.1 \times 10^{-3}$m (0.36 in.)
   5.2 Wire Diameter: $1.14 \times 10^{-3}$m (0.045 in.)
   5.3 Approx. load at solid HT: 7.5 Kg (16.5 lbs)
   5.4 Free length: $6.35 \times 10^{-2}$m (2.5 in.)
   5.5 Spring rate: 189.8 kg/m (10.6 lbs/in)
   5.6 Solid HT: $2.4 \times 10^{-2}$m (0.945 in)

6. INTERFACES:
   6.1 Mechanical: soap dispenser poppet

7. ENVIRONMENT: Cabin ambient

8. DUTY CYCLE: N/A

9. ENVELOPE: $9.6 \times 10^{-3}$m (3/8") dia x $6.3 \times 10^{-2}$m (2-1/2") long

SPACECRAFT UTENSIL/HAND CLEANSING FIXTURE DESIGN CONTROL SPECIFICATION SHEET

ITEM: (-028) O-RING

1. SCOPE: This specification describes the requirements for an O-ring used in the soap dispenser.

2. FUNCTION: To provide a dynamic seal between soap dispenser poppet and cylinder wall.

3. DESCRIPTION: Reference Parker part no. 2-111

4. MATERIALS: Buna-N

5. PERFORMANCE: N/A

6. INTERFACES:

   6.1 Mechanical: O-ring groove in poppet

7. ENVIRONMENT: Liquid soap

8. DUTY CYCLE: N/A

9. ENVELOPE: Negligible

SPACECRAFT UTENSIL/HAND CLEANSING FIXTURE DESIGN CONTROL SPECIFICATION SHEET

ITEM: (-029) O-RING

1. SCOPE: This specification describes the requirements for an O-ring used in the soap dispenser.

2. FUNCTION: To provide seal between poppet and housing shuting off soap flow.

3. DESCRIPTION: Reference Parker part no. 2-010

4. MATERIALS: Buna-N

5. PERFORMANCE: N/A

6. INTERFACES:

   6.1 Mechanical: O-ring groove in poppet

7. ENVIRONMENT: liquid soap, cabin ambient

8. DUTY CYCLE: N/A

9. ENVELOPE: Negligible

SPACECRAFT UTENSIL/HAND CLEANSING FIXTURE DESIGN CONTROL SPECIFICATION SHEET

ITEM: (-030) ELECTRIC SWITCH

1. SCOPE: This specification describes the requirements for a switch used with the knee actuator lever.

2. FUNCTION: To control solenoid valve on water supply system.

3. DESCRIPTION: Reference Newark part no. 67F1790

4. MATERIALS: TBD

5. PERFORMANCE:
   5.1 Operating force: Less than 0.9 kg (2 lbs)
   5.2 Operating: N.C. momentary
   5.3 Contact rating: 3 amps

6. INTERFACES:
   6.1 Mechanical: Panel mount

7. ENVIRONMENT: Cabin ambient

8. DUTY CYCLE: N/A

9. ENVELOPE: $1.3 \times 10^{-2}$ m (1/2") dia x $3.2 \times 10^{-2}$ (1.25") long

SPACECRAFT UTENSIL/HAND CLEANSING FIXTURE DESIGN CONTROL SPECIFICATION SHEET

ITEM: (-031) SPRING

1. SCOPE: This specification describes the requirements for a spring used in the soap dispenser.

2. FUNCTION: To provide the dispensing force on the piston in the dispenser

3. DESCRIPTION: Reference Lee Spring part no. LC-045G-12

4. MATERIALS: Stainless steel

5. PERFORMANCE:
   5.1 Outside diameter: $1.2 \times 10^{-2}$m (0.48 in)
   5.2 Wire diameter: $1.14 \times 10^{-3}$m (0.045 in)
   5.3 Approx. load @ solid HT: 5.2 kg (11.5 lbs)
   5.4 Free length: $6.35 \times 10^{-2}$m (2.5 in)
   5.5 Spring rate: 111 kg/m (6.2 lbs/in)
   5.6 Solid HT: $1.7 \times 10^{-2}$m (0.66 in)

6. INTERFACES:
   6.1 Mechanical: Soap dispenser piston

7. ENVIRONMENT: Cabin ambient

8. DUTY CYCLE: N/A

9. ENVELOPE: $1.3 \times 10^{-2}$m (1/2") dia x $6.35 \times 10^{-2}$m (2.50") long

SPACECRAFT UTENSIL/HAND CLEANSING FIXTURE DESIGN CONTROL SPECIFICATION SHEET

ITEM: (-032) O-RING

1. SCOPE: This specification describes the requirements for an O-ring used in the soap dispenser.

2. FUNCTION: To provide a seal between piston and cylinder wall.

3. DESCRIPTION: Reference Parker part no. 2-114

4. MATERIALS: Buna-N

5. PERFORMANCE: N/A

6. INTERFACES:
   6.1 Mechanical: O-ring groove in piston

7. ENVIRONMENT: Cabin ambient

8. DUTY CYCLE: N/A

9. ENVELOPE: Negligible

SPACECRAFT UTENSIL/HAND CLEANSING FIXTURE DESIGN CONTROL SPECIFICATION SHEET

ITEM: (-033) METERING VALVE

1. SCOPE: This specification describes the requirements for a metering valve used in the water subsystem.

2. FUNCTION: To lower water pressure to an acceptable level for water conservation

3. DESCRIPTION: Reference Hoke part no. 3232F2S

4. MATERIALS: 303 Stainless steel

5. PERFORMANCE:
   5.1 Orifice size: $1.5 \times 10^{-3}$m (0.059 in.)
   5.2 $C_v$ factor: .05
   5.3 Type: Globe pattern

6. INTERFACES:
   6.1 Mechanical: Panel mount
   6.2 Fluid: $3.2 \times 10^{-3}$m (1/8") female pipe threaded ports

7. ENVIRONMENT: Cabin ambient

8. DUTY CYCLE: N/A

9. ENVELOPE: $3.8 \times 10^{-2}$m (1-1/2") x $5.1 \times 10^{-2}$m (2") x $7.6 \times 10^{-2}$m (3")

SPACECRAFT UTENSIL/HAND CLEANSING FIXTURE DESIGN CONTROL SPECIFICATION SHEET

ITEM: (-034) SPACELAB RACK

1. SCOPE: This specification describes the requirements for a spacelab rack used to support components making up the cleansing fixture.

2. FUNCTION: Holding fixture for the components that make up the spacecraft utensil/hand cleansing fixture.

3. DESCRIPTION: Reference Bud Radio part no. 38526. (Government furnished property)

4. MATERIALS: 14 and 18 ga. steel

5. PERFORMANCE: N/A

6. INTERFACES: N/A

7. ENVIRONMENT: Cabin ambient

8. DUTY CYCLE: N/A

9. ENVELOPE: 0.57m (22.5") x 1.25m (49.1") x 2.75m (108.4")

SPACECRAFT UTENSIL/HAND CLEANSING FIXTURE DESIGN CONTROL SPECIFICATION SHEET

ITEM: (-035) QUICK DISCONNECT, STEM HALF

1. SCOPE: This specification describes the requirements for a disconnect on the fluid subsystem.

2. FUNCTION: To facilitate the isolation of bladder tanks from the remaining system.

3. DESCRIPTION: Reference Swagelok part no. SS-QC4-D-400

4. MATERIALS: 316 stainless steel

5. PERFORMANCE:
   5.1 Operating Technique: Push-pull type with collar
   5.2 Sealing: Self-sealing when disconnected

6. INTERFACES:
   6.1 Fluid: $6.4 \times 10^{-3}$m (1/4¼) tube union

7. ENVIRONMENT: Cabin ambient

8. DUTY CYCLE: N/A

9. ENVELOPE: $1.6 \times 10^{-2}$m (5/8") dia x $5.1 \times 10^{-2}$m (2") long

SPACECRAFT UTENSIL/HAND CLEANSING FIXTURE DESIGN CONTROL SPECIFICATION SHEET

ITEM: (-036) TEE FITTING

1. SCOPE: This specification describes the requirements for a tee fitting used in the fluid subsystem.

2. FUNCTION: To provide branching in the fluid line when required.

3. DESCRIPTION: Reference Swagelok part no. SS-400.3

4. MATERIALS: 316 stainless steel

5. PERFORMANCE: N/A

6. INTERFACES:
   6.1 Fluid: $6.4 \times 10^{-3}$m (1/4") tube union

7. ENVIRONMENT: Cabin ambient

8. DUTY CYCLE: N/A

9. ENVELOPE: Negligible

SPACECRAFT UTENSIL/HAND CLEANSING FIXTURE DESIGN CONTROL SPECIFICATION SHEET

ITEM: (-037) TEE FITTING

1. SCOPE: This specification describes the requirements for a tee fitting used in the water subsystem.

2. FUNCTION: Used as an adaptor between pressure gages and $6.4 \times 10^{-3}$m (1/4") tubing.

3. DESCRIPTION: Reference Swagelok part no. SS-400.3.4-TTF

4. MATERIALS: 316 stainless steel

5. PERFORMANCE: N/A

6. INTERFACES:
Fluid: $6.4 \times 10^{-3}$M (1/4") pipe thd, $6.4 \times 10^{-3}$m (1/4") tube union

7. ENVIRONMENT: Cabin ambient

8. DUTY CYCLE: N/A

9. ENVELOPE: Negligible

SPACECRAFT UTENSIL/HAND CLEANSING FIXTURE DESIGN CONTROL SPECIFICATION SHEET

ITEM: (-038) SOLENOID VALVE

1. SCOPE: This specification describes the requirements for a solenoid valve used in the water subsystem.

2. FUNCTION: To control the on-off flow of water to the washing enclosure.

3. DESCRIPTION: Reference Skinner part no. B2Lx174

4. MATERIALS: 316 stainless steel

5. PERFORMANCE:
   5.1 Voltage: 26 VDC
   5.2 Type: Normally closed

6. INTERFACES:
   6.1 Mechanical: base/bolts
   6.2 Fluid: $3.2 \times 10^{-3}$ m (1/8") pipe thd parts

7. ENVIRONMENT: Cabin ambient

8. DUTY CYCLE: N/A

9. ENVELOPE: $2.54 \times 10^{-2}$ m (1") dia x $6.35 \times 10^{-2}$ m (2½") long

SPACECRAFT UTENSIL/HAND CLEANSING FIXTURE DESIGN CONTROL SPECIFICATION SHEET

ITEM: (-039) THROTTLING VALVE

1. SCOPE: This specification describes the requirements for a throttling valve used in the water subsystem.

2. FUNCTION: To control the flow rate of the supply water to the washing enclosure.

3. DESCRIPTION: Reference Hoke part no. 3212 F25

4. MATERIALS: 303 stainless steel

5. PERFORMANCE:
   5.1 Orifice Size: $4.3 \times 10^{-3}$m (0.17 in)
   5.2 $C_V$ Factor: .35
   5.3 Type: Globe pattern

6. INTERFACES:
   6.1 Mechanical: Panel mount
   6.2 Fluid: $3.2 \times 10^{-3}$m (1/8") female pipe threaded parts

7. ENVIRONMENT: Cabin ambient

8. DUTY CYCLE: N/A

9. ENVELOPE: $3.8 \times 10^{-2}$m(1.5in) by $5.1 \times 10^{-2}$m(2in) by $7.6 \times 10^{-2}$m(3 in)

SPACECRAFT UTENSIL/HAND CLEANSING FIXTURE DESIGN CONTROL SPECIFICATION SHEET

ITEM: (-040) BULKHEAD FITTING

1. SCOPE: This specification describes the requirements for a bulkhead fitting used in the water system.

2. FUNCTION: To provide an interface for an external water supply for the cleansing fixture.

3. DESCRIPTION: Reference Swagelok part no. SS-400-61.

4. MATERIALS: 316 stainless steel

5. PERFORMANCE: N/A

6. INTERFACES:
   6.1 Mechanical: Panel mount
   6.2 Fluid: $6.4 \times 10^{-3}$m (1/4¼) tube union

7. ENVIRONMENT: Cabin ambient

8. DUTY CYCLE: N/A

9. ENVELOPE: Negligible

SPACECRAFT UTENSIL/HAND CLEANSING FIXTURE DESIGN CONTROL SPECIFICATION SHEET

ITEM: (-041) THREE-WAY VALVE

1. SCOPE: This specification describes the requirements for a three-way valve used in the water supply system

2. FUNCTION: To provide a switching mode capability from internal to external water supply source.

3. DESCRIPTION: Reference Whitey part no. 42 x F2 three-way ball valve.

4. MATERIALS: 316 stainless steel

5. PERFORMANCE:
   - 5.1 Orifice: $3.2 \times 10^{-3}$m (0.125 in)
   - 5.2 $C_V$ Factor: 0.32
   - 5.3 Pressure Rating: $1.72 \times 10^{7}$ N/m$^2$ (2500 psi)

6. INTERFACES:
   - 6.1 Mechanical: Panel mount
   - 6.2 Fluid: $3.2 \times 10^{-3}$m (1/8") pipe threaded parts

7. ENVIRONMENT: Cabin ambient

8. DUTY CYCLE: N/A

9. ENVELOPE: $2.54 \times 10^{-2}$m(1") x $6.35 \times 10^{-2}$m (2½") x $6.35 \times 10^{-2}$m (2½")

SPACECRAFT UTENSIL/HAND CLEANSING FIXTURE DESIGN CONTROL SPECIFICATION SHEET

ITEM: (-042) PIPE COUPLING

1. SCOPE: This specification describes the requirements for a pipe coupling used in the water system.

2. FUNCTION: To adapt bladder tank to fluid line.

3. DESCRIPTION: Reference Cajon part no. 16-HCG-316

4. MATERIALS: 316 stainless steel

5. PERFORMANCE: N/A

6. INTERFACES:
   6.1 Fluid: $2.54 \times 10^{-2}$m (1") pipe thd

7. ENVIRONMENT: Cabin ambient

8. DUTY CYCLE: N/A

9. ENVELOPE: Negligible

SPACECRAFT UTENSIL/HAND CLEANSING FIXTURE DESIGN CONTROL SPECIFICATION SHEET

ITEM: (-043) THERMISTER PROBE

1. SCOPE: This specification describes the requirements for a thermister used in the L-G-S sump.

2. FUNCTION: To sense water level in L-G-S sump and activate water pump.

3. DESCRIPTION: Reference Midwest Components Inc. part no. 9RT2G13

4. MATERIALS: TBD

5. PERFORMANCE: 10K OHMS at $25^{\circ}C$

6. INTERFACES:
   6.1 Electrical: 2-wire leads
   6.2 Mechanical: $9.5 \times 10^{-3}$m dia x 945.6 thds per m (3/8-24) thded mount

7. ENVIRONMENT: Cabin ambient

8. DUTY CYCLE: N/A

9. ENVELOPE: Negligible

SPACECRAFT UTENSIL/HAND CLEANSING FIXTURE DESIGN CONTROL SPECIFICATION SHEET

ITEM: (-044) GEAR RACK

1. SCOPE: This specification describes the requirements for a gear rack used in the soap dispensing system.

2. FUNCTION: To provide a means of converting linear motion to rotary for valve activation.

3. DESCRIPTION: Reference Boston Gear part no. Y48

4. MATERIALS: Brass

5. PERFORMANCE: N/A

6. INTERFACES:
   6.1 Mechanical - attached with screws to slider block and meshes with spur gear.

7. ENVIRONMENT: Cabin ambient

8. DUTY CYCLE: N/A

9. ENVELOPE: $3.2 \times 10^{-3}$m (1/8") x $3.2 \times 10^{-3}$m (1/8") x 0.15m (6") long

SPACECRAFT UTENSIL/HAND CLEANSING FIXTURE DESIGN CONTROL SPECIFICATION SHEET

ITEM: (-045) SPUR GEAR

1. SCOPE: This specification describes the requirements for a spur gear used in the soap dispensing system.

2. FUNCTION: To provide a means of converting linear motion to rotary for valve activation.

3. DESCRIPTION: Reference Bost Gear part no. Y48144, 48 pitch, 144 teeth, $7.6 \times 10^{-2}$m (3 in) pitch dia, $20^{\circ}$ pressure angle.

4. MATERIALS: Brass

5. PERFORMANCE: N/A

6. INTERFACES:
   6.1 Mechanical: Center bore of gear will fit stem of ball valve.

7. ENVIRONMENT: Cabin ambient

8. DUTY CYCLE: N/A

9. ENVELOPE: $1.9 \times 10^{-2}$m (3/4") high x $7.6 \times 10^{-2}$m(3 in) dia.

SPACECRAFT UTENSIL/HAND CLEANSING FIXTURE DESIGN CONTROL SPECIFICATION SHEET

ITEM: (-046) SOLENOID

1. SCOPE: This specification describes the requirements for a solenoid used in the soap dispensing system.

2. FUNCTION: To provide the energy for the linear motion involved in the dispensing action.

3. DESCRIPTION: Reference Guardian part no. 18, intermittent duty.

4. MATERIALS: N/A

5. PERFORMANCE:
   5.1 Resistance: 8.8 OHMS
   5.2 Duty: Intermittent
   5.3 Max Stroke: $2.54 \times 10^{-2}$m (1-inch)

6. INTERFACES:
   6.1 Electrical: Extended tabs
   6.2 Mechanical: Flanged base attached to bracket with screws

7. ENVIRONMENT: Cabin ambient

8. DUTY CYCLE: Should not be energized for more than 5 consecutive minutes.

9. ENVELOPE: $6.3 \times 10^{-2}$m(2½") x $4.6 \times 10^{-2}$m (1 13/16") x $5.2 \times 10^{-2}$m (2 1/16")

SPACECRAFT UTENSIL/HAND CLEANSING FIXTURE DESIGN CONTROL SPECIFICATION SHEET

ITEM: (-047) BALL VALVE

1. SCOPE: This specification describes the requirements for a ball valve used in the soap dispensing system.

2. FUNCTION: To control the flow of liquid soap in the system.

3. DESCRIPTION: Reference Whitey part no. 42S4-316

4. MATERIALS: 316 stainless steel

5. PERFORMANCE:
   5.1 Orifice: $4.7 \times 10^{-3}$m (0.187 in.)
   5.2 $C_V$ Factor: 1.2
   5.3 Pressure rating: $2.07 \times 10^{7}$ N/m$^2$ (3000 psi)

6. INTERFACES:
   6.1 Mechanical - valve steam attachment to bracket
   6.2 Fluid - $6.4 \times 10^{-3}$m (¼") swagelok fittings

7. ENVIRONMENT: Cabin ambient

8. DUTY CYCLE: N/A

9. ENVELOPE: $6.35 \times 10^{-2}$m (2½") x $4.7 \times 10^{-2}$m (1 7/8") x $1.9 \times 10^{-2}$m (3/4")

SPACECRAFT UTENSIL/HAND CLEANSING FIXTURE DESIGN CONTROL SPECIFICATION SHEET

ITEM: (-048) TUBE UNION FITTING

1. SCOPE: This specification describes the requirements for tube union fitting used in the soap distribution system.

2. FUNCTION: To provide a connection between the main soap line and the dispenser unit.

3. DESCRIPTION: Reference Swagelok part no. SS-400-6

4. MATERIALS: 316 stainless steel

5. PERFORMANCE: N/A

6. INTERFACES:
   6.1 Fluid: $6.4 \times 10^{-3}$ m (¼") tube connection

7. ENVIRONMENT: Cabin ambient

8. DUTY CYCLE: N/A

9. ENVELOPE: Negligible